WAIMAKARIRI
DISTRICT COUNCIL

Community and Recreation Committee

Agenda

Tuesday 18 May 2021

2.30pm

Function Room
Rangiora Town Hall
303 High Street
Rangiora

Members:

Councillor Philip Redmond (Chairperson)
Councillor Al Blackie
Councillor Robbie Brine
Councillor Wendy Doody
Councillor Niki Mealings
Mayor Dan Gordon (ex officio)

The Chairman and Members
COMMUNITY AND RECREATION COMMITTEE

A meeting of the **COMMUNITY AND RECREATION COMMITTEE** will be held in the **FUNCTION ROOM, RANGIORA TOWN HALL, 303 HIGH STREET, RANGIORA** on **TUESDAY 18 MAY 2021** at **2.30PM.**

Recommendations in reports are not to be construed as Council policy until adopted by the Council

BUSINESS

Page No

1 APOLOGIES

2 CONFLICTS OF INTEREST

Conflicts of interest (if any) to be reported for minuting.

3 CONFIRMATION OF MINUTES

3.1 **Minutes of a meeting of the Community and Recreation Committee held on 23 February 2021**

The Community and Recreation Committee meeting held 23 March 2021 lapsed due to lack of quorum. Therefore, the Minutes to be confirmed is for the previous meeting held on 23 February 2021.

7 - 11

RECOMMENDATION

THAT the Community and Recreation committee:

(a) **Confirms** the circulated Minutes of a meeting of the Community and Recreation Committee, held on 23 February 2021, as a true and accurate record.

4 MATTERS ARISING

5 DEPUTATIONS

Nil.

6 REPORTS

6.1 **Community Team Update – Neighbourhood Park Barbeque Events – Tessa Sturley (Community Team Manager)**

12 - 16

RECOMMENDATION

THAT the Community and Recreation Committee:

(a) **Receives** report No. 210312042036.

(b) **Notes** the success of these events and the positive feedback from residents.

(c) **Notes** that in light of this success, staff will work with community partners to develop a similar suite of events for the 2021/2022 financial year.

(d) **Notes** that community development staff will continue to apply a strategic approach to community-led neighbourhood connection, partnering with North Canterbury Neighbourhood Support.

6.2 **Community Team Update – Social and Health Sector Networks – Tessa Sturley (Community Team Manager)**

17 - 45

RECOMMENDATION

THAT the Community and Recreation Committee:

(a) **Receives** report No. 210312042030.

(b) **Notes** the extensive range of networks supported by the Community Team.

(c) **Notes,** in particular, the role that Community Development staff play in supporting the ongoing work of the Waimakariri Health Advisory Group, Social Services Waimakariri and the Waimakariri Access Group.

(d) **Notes** Community Team staff involvement in regional groups and networks that promote and facilitate health and wellbeing.

(e) **Notes** the significant value of the collaborative partnership between community development and social services Waimakariri in the addressing of issues relating to social wellbeing.

6.3 **Covid-19 Social Recovery Update – Tessa Sturley (Community Team Manager)**

46 - 101

RECOMMENDATION

THAT the Community and Recreation Committee:

(a) **Receives** report No. 210507073001

(b) **Notes** the evidence-based, collaborative approach applied to the facilitation of social recovery from COVID-19.

(c) **Notes** that, while some of this work sits under existing portfolios, several key projects have arisen, requiring additional staff resource. These include Food Security, the Kaiapoi Community Hub, support for the newly unemployed and the establishment of the 'Next Steps' website, including the acquisition of funding for its development, promotion and maintenance.

(d) **Notes** that, with central government's significant financial contribution; and the collaborative approach, sound governance and planning applied to date, key funders, including Rata Foundation and Department of Internal Affairs (DIA) have expressed significant interest in supporting the further development of the Food Security and associated community hub projects.

(e) **Notes** that proposed funding support does not include provision for resourcing for facilitation of this, or other key projects associated with the social recovery of our District. Provision for such resourcing has been made through Council's COVID-19 Recovery fund, until July 2022. This will been reviewed in early 2022, with a staff report to Council.

(f) **Notes** that a presentation of progress to in relation to two key projects, food security and the 'Next Steps' website, will follow the presentation of this report.

6.4 **Aquatic Facilities Update – Matthew Greenwood (Aquatic Facilities Manager)**

102 - 108

RECOMMENDATION

THAT the Community and Recreation Committee:

(a) **Receives** report No. 210302035494.

(b) **Notes** Aquatic Facilities progress against its key performance indicators including Facility Attendance, Financial results and Water Quality.

(c) **Notes** Covid 19 level changes continue to have an impact on operation and the steps taken by staff to keep the community safe while ensuring minimal disruption to activities.

(d) **Notes** the investigation into Levels of Service will ensure community need is balanced with efficient operation.

(e) **Notes** Poolsafe assessment has been delayed to mid-March due to Covid restrictions.

(f) **Circulates** the report to the Boards for their information.

6.5 **Aquatic Facilities Update – Matthew Greenwood (Aquatic Facilities Manager)**

109 - 119

RECOMMENDATION

THAT the Community and Recreation Committee:

(a) **Receives** report No. 210504070534.

(b) **Notes** Aquatic Facilities progress against its key performance indicators including Facility Attendance, Financial results and Water Quality.

(c) **Notes** Waimakariri Aquatic Facilities were awarded Poolsafe accreditation.

(d) **Notes** purchase of a height access bridge at $6,226.56.

(e) **Notes** that this purchase will result in an overspend of $3,443 from Dudley's Health and Safety budget.

6.6 **Library Update to 5 March 2021 – Paula Eskett (District Libraries Manager)**

120 - 131

RECOMMENDATION

THAT the Community and Recreation Committee:

(a) **Receives** report No. 210305037871.

(b) **Notes** customer service improvements, community feedback, programmes and engagement, also improved staff welfare offered by Waimakariri Libraries, from December 2020 to March 2021.

(c) **Circulates** the report to the Boards for their information.

6.7 **Library Update to 30 April 2021 – Paula Eskett (District Libraries Manager)**

132 - 142

RECOMMENDATION

THAT the Community and Recreation Committee:

(a) **Receives** report No. 210503069799

(b) **Notes** the customer service improvements, community feedback, programmes and engagement and NZLPP outcomes by Waimakariri Libraries, from 6 March - 30 April, 2021.

(c) **Circulates** the report to the Boards for their information.

6.8 **Adoption of the Cemetery Policy – Recommendation of Hearing Panel**

143 - 179

RECOMMENDATION

THAT the Community and Recreation Committee:

(a) **Adopts** Clause 7.2.5 (iv) Option 2

”One plot may be pre-purchased by an individual for their exclusive use.”

(b) **Notes** Option 1 requires re-validation of the purchase of a plot every 10 years. This proposal was not part of the original draft policy presented for public consultation.

THAT the Community and Recreation Committee **recommends:**

THAT the Council:

(c) **Receives** report No. 210325049648.

(d) **Adopts** the draft Cemetery Policy (Trim: 200916122776), incorporating the changes made by the Hearing Panel and the Community and Recreation Committee as attached, to take effect on adoption.

(e) **Notes** a copy of this report will be sent to the Community Boards for their information.

7 CORRESPONDENCE

Nil.

8 PORTFOLIO UPDATES

8.1 **Greenspace (Parks, Reserves and Sports Grounds) – Councillor Robbie Brine.**

8.2 **Community Facilities (including Aquatic Centres, Multi-use Sports Stadium, Libraries/Service Centres, Town Halls, Museums and Community Housing) – Councillor Wendy Doody.**

8.3 **Community Development and Wellbeing – Councillor Wendy Doody.**

9 QUESTIONS

10 URGENT GENERAL BUSINESS

WORKSHOP

- *Silverstream Reserve Ranger Debrief – Mike Kwant (Community Projects Officer)*

MINUTES OF A MEETING OF THE COMMUNITY AND RECREATION COMMITTEE HELD IN THE FUNCTION ROOM, RANGIORA TOWN HALL, 303 HIGH STREET, RANGIORA ON TUESDAY 23 FEBRUARY 2021 COMMENCING AT 4.00PM.

PRESENT

Councillors Redmond (Chairperson), A Blackie, W Doody, N Mealings, R Brine and Mayor D Gordon.

IN ATTENDANCE

C Brown (Manager Community and Recreation), M Greenwood (Aquatic Facilities Manager), R O'Loughlin (Greenspace Asset and Capital Programme Advisor) and C Fowler-Jenkins (Governance Support Officer).

1 APOLOGIES

No apologies were received.

2 CONFLICTS OF INTEREST

No conflicts of interest were declared.

3 CONFIRMATION OF MINUTES

3.1 Minutes of a meeting of the Community and Recreation Committee held on 15 December 2020

Moved: Councillor Blackie Seconded: Councillor Doody

THAT the Community and Recreation Committee:

(a) **Confirms** the circulated Minutes of a meeting of the Community and Recreation Committee, held on 15 December 2020, as a true and accurate record.

CARRIED

4 MATTERS ARISING

Nil.

5 DEPUTATIONS

Nil.

6 REPORTS

6.1 Draft Community and Recreation Activity Management Plan – G MacLeod (Community Greenspace Manager) and R O'Loughlin (Greenspace Asset and Capital Programme Advisor)

R O'Loughlin advised that the Draft Community and Recreation Activity Management Plan 2021 (AMP) pertained to parks, reserves, community facilities and aquatic facilities. During 2020, in preparation for the 2021-2031 Long Term Plan (LTP), staff reviewed and updated the AMP. This review formed the basis for the draft 2021-2031 LTP budgets and therefore provided the supporting information for the LTP and the 30 Year Infrastructure Strategy. He explained that the plan outlined the significant issues associated with Greenspace and Aquatic activities and assets, and identified the future funding requirements and upgrades to maintain the levels of service and manage growth and renewals of existing assets.

Unconfirmed

Councillor Doody noted that provision of $250,000 had been made in the AMP for the installation of the new toilets at the West Oxford Reserve. She enquired what the process would be going forward. R O'Loughlin explained that it was his understanding that staff was investigating the possibility of securing some funding from the Tourism Infrastructure Fund. C Brown confirmed that the timeline for the project had been extended, as Tourism Infrastructure Fund was not available, and it seemed that there would be no funding available for some time

Councillor Doody further enquired if the West Oxford Reserve was owned by Environment Canterbury (ECan). C Brown advised it was largely a Council-owned reserve, however, the parcel of land adjacent to the Eyre River was owned by ECan. He confirmed that ECan had not been approached for funding.

In response to questions from Councillor Mealings, R O'Loughlin confirmed that consultation was currently underway with the community and the Community Board regarding the proposed Good Street redevelopment. The current financial year's budget included $50,000 for this project.

Councillor Redmond sought clarity on the which work contained in the AMP had been completed, and which work was still ongoing. R O'Loughlin commented that from 2018 to date many of the projects identified in section 10 of the AMP had been completed. The capturing of updated information regarding aquatics and community facilities' assets could be considered the most significant project.

Councillor Doody questioned the Cust Community Centre classification. C Brown explained that the New Zealand Recreation Association identified nine different categories which were used as a yardstick to determine the Council's levels of service. Staff took some time to examine which categories apply to reserves which were primarily dominated by a community facility building, and what levels of service would be appropriate for those reserves. Subsequently, they were identified as neighbourhood parks with a higher catchment level which increased the levels of service. Cust Community Centre was therefore classified as a neighbourhood park.

Councillor Blackie enquired what the difference was between a 'local catchment' and a 'community catchment'. C Brown clarified that a 'local catchment' referred to a smaller neighbourhood reserves which could be access by approximately a ten minute walk or was located no further that 500 meters. These reserves often did not have public toilet facilities as they only served the local residents who would be able to walk home. Many of the more rural reserves would be classified as having a community catchment, because it was anticipated that people would have to travel from within the wider community to be able to access these reserves. These reserves often boasted a number of facilities such as public toilets, BMX tracks and barbeques, because they were catering for a larger number of people from a wider area.

Moved: Councillor Doody Seconded: Councillor Blackie

THAT the Community and Recreation Committee:

(a) **Receives** report No. 210211022420

RECOMENDS that the Council:

(b) **Notes** that the Draft Community and Recreation Activity Management Plan 2021 had been sent to an external consultant for peer review.

(c) **Adopts** the Draft Community and Recreation Activity Management Plan for the purposes of the 2021-2031 Long Term Plan consultation (TRIM 210204018373).

Unconfirmed

(d) **Approves** that the Community Greenspace Manager may make minor amendments, if required, as result of the peer review.

(e) **Notes** that the final Activity Management Plan would be adopted by Council in conjunction with the adoption of the final 2021-2031 Long Term Plan in June 2021.

CARRIED

Councillor Doody noted that this was a well drafted report, and thanked staff for the work done on the draft Community and Recreation Activity Management Plan, which had been a big undertaking.

6.2 **Aquatic Facilities Update – Matthew Greenwood (Aquatic Facilities Manager)**

M Greenwood provided a brief update on the Aquatic Facilities' year to date progress. He highlighted the following

- The impact Covid 19 had on customer attendance during the December 2020 holiday period.
- In December 2020, staff were notified by the Three Waters Department about a Norovirus effecting the community. Staff conducted some additional testing at the Waikuku Beach paddling pool, however no contamination was found. As a precaution, staff did disinfect the pool and the site to ensure community safety.
- An act of vandalism also accrued at the Waikuku Beach paddling pool, over the holiday period, where a glass bottle was smashed into the pool. This act had a negative impacted the Aquatic Team's levels of service, as the pool had to be closed for a couple of days while it was drained and cleaned up.
- The plant maintenance works at the Kaiapoi Aquatics Facility had a successful completion. The majority of those works were in the pool shells themselves, however, some maintenance had also been done to the pumps and equipment in the plant

Councillor Redmond enquired how the Council was notified of the broken glass at the Waikuku Beach paddling pool. M Greenwood advised that the Council generally relied on the community to notify them of such incidences. Although an Aquatic Team member visited the site daily to ensure the site was clean and tidy, the staff member was only on site for approximately 45 minutes a day so, hence the reliance on the public.

Moved: Councillor Brine Seconded: Councillor Doody

THAT the Community and Recreation Committee:

(a) **Receives** report No. 200925128402.

(b) **Notes** Aquatic Facilities progress against its key performance indicators including Facility Attendance, Financial results and Water Quality.

(c) **Notes** the impact Covid 19 has had on operation and customer attendance.

(d) **Notes** the Canterbury District Health Board support the resumption of Learn to Swim activities during Covid Level 2 with appropriate safeguards in place.

(e) **Circulates** the report to the Boards for their information.

CARRIED

Unconfirmed

7 CORRESPONDENCE

Nil.

8 PORTFOLIO UPDATES

8.1 Greenspace (Parks, Reserves and Sports Grounds) – Councillor R Brine.

- There was currently a Fire Blight infection that was infecting some of the districts Whitebeam trees. Staff had been in contact with Ministry of Primary Industries (MPI) who had provided advice. Fire Blight was a bacterial infection that had no current fix. Trees that were identified as being infected needed to be removed and tools cleaned after use.
- Tree watering in the district was still ongoing, however, with the morning dew starting this would stop soon.
- Staff had received a quote for the development of the tennis courts at the proposed Coldstream Road Tennis Centre in Rangiora. The prices came in higher than the $1 million Council contribution, however, the quote did include some items which would fall under the auspice of the tennis club. Staff had met with the tennis clubs to discuss the current pricing and it was agreed to proceed. Staff would be preparing a report for Council approval to progress the project soon.
- Tirikatene Park (Silverstream Estate) toilets were completed. Mandeville Sports Centre toilets were still under construction and the Maria Andrews Park toilets were currently under design. The Maria Andrews Park toilets would be completed as part of the upgrade to the car park and would also include the removal of the current Waimakariri United Football Clubroom which had not been used in many years.
- The Swannanoa Cricket Club had asked for more water for irrigation. Staff were looking at temporarily increasing the water units they had available for extra irrigation capacity for the next few months. Loburn Domain had seven 30,000 litre tanks installed to increase irrigation capacity, hopefully this would allow the fields to be softer at the start of the rugby season.
- There was $12,000 worth of vandalism repair completed in January 2021, which was higher than usual.
- The development of the Hurunui Reserve in Pegasus had been completed.
- The Cust Community Centre car park project commenced on Monday 22 February.
- The Flagtracks System for the street banners had now been installed.
- The new softball diamonds at the Norma Kirk Park looked excellent.

C Brown noted that there had been an outbreak of Fire Blight infection in 2005 and the MPI did not seem particularly concerned. Fire Blight could however but very destructive to fruiting trees and therefore needed to be eradicated. It was currently mainly found in Pegasus and any declining trees would be quickly removed and the Council would sure that contractors were disposing of the mulch into a different place and also cleaning all of their tools.

Councillor Redmond questioned if the Fire Blight infestation in Pegasus may be caused by the lack of irrigation system in Pegasus. C Brown explained that the Council discontinued the irrigation system in Pegasus, which was installed by the developers. The Council usually disconnected the watering system in developments as the maintenance cost were too high. Pegasus had many Whitebeam trees which were very susceptible to Fire Blight infestation

Unconfirmed

8.2 **Community Facilities (including Aquatic Centres, Multi-use Sports Stadium, Libraries/Service Centres, Town Halls, Museums and Community Housing) – Councillor W Doody.**

- The Mandeville Sports Club had raised concern regarding the bright colour which the new Club toilets had been painted.
- Councillor Doody congratulated staff on the planting in the town centres and the beautification as it was looking fabulous.

8.3 **Community Development and Wellbeing – Councillor W Doody and Councillor N Atkinson.**

- On Thursday 25 February 2021 a morning tea would be held for pensioners to discuss wellness and health as well as pensioner housing.

9 QUESTIONS

Nil.

10 URGENT GENERAL BUSINESS

Nil.

THERE BEING NO FURTHER BUSINESS THE MEETING CONCLUDED AT 4.36pm.

CONFIRMED

_____
Chairperson

_____
Date

Unconfirmed

WAIMAKARIRI DISTRICT COUNCIL

REPORT FOR INFORMATION

FILE NO and TRIM NO:	GOV-01-04 / CMS-09-10-02 / 210312042036
REPORT TO:	Community and Recreation Committee
DATE OF MEETING:	23 March 2021
FROM:	Tessa Sturley – Community Team Manager
SUBJECT:	COMMUNITY TEAM UPDATE – Neighbourhood Park Barbeque Events

SIGNED BY:
(for Reports to Council, Committees or Boards)

Department Manager

Acting Chief Executive

1. SUMMARY

1.1. This report provides an update on the 2020/2021 series of Neighbourhood Park events held throughout the District between December 2020 and end of March 2021

1.2. The report discusses the role that these have played in connecting residents, identifying community need and providing a platform where people can have their perspective included in local decision making

1.3. It also considers appropriate steps for Neighbourhood Development, going forward.

2. RECOMMENDATION

THAT the Community and Recreation committee:

(a) **Receives** report No. 210312042036

(b) **Notes** the success of these events and the positive feedback from residents.

(c) **Notes** that in light of this success, staff will work with community partners to develop a similar suite of events for the 2021/2022 financial year

(d) **Notes** that community development staff will continue to apply a strategic approach to community-led neighbourhood connection, partnering with North Canterbury Neighbourhood Support

3. BACKGROUND

Alongside a sustained period of rapid growth, and changing demographics, the impact of 10 years of natural and pandemic disasters has seen a disproportionate increase in family harm, suicide, mental health issues, social isolation and family harm, all with considerable potential to impact on the overall social wellbeing of our District's population.

One means of facilitating positive social outcomes is to develop a culture where residents in local neighbourhoods feel connected to each other and, subsequently, to the wider community.

As part of a broader focus on community resilience, wellbeing and social inclusion, Community Team staff have partnered with Council's Greenspace Team to develop the Neighbourhood Park Barbeque Project. This has focussed on some of the smaller parks in residential neighbourhoods across the District (particularly those due for some redevelopment), as well as new subdivisions and areas that are likely to have higher numbers of rental tenants and little social connection.

4. ISSUES AND OPTIONS

4.2. Project Overview

4.2.1. Neighbourhood Barbeque Events were held between December 2020 and March 2021; typically on a Thursday evening between 5 and 7pm. Following conversations with appropriate stakeholders across the District, these events were held at the following locations:

- Baker Park, Kaiapoi
- Sovereign Palms, Kaiapoi
- Good St, Rangiora
- Elephant Park, Rangiora
- Arlington Park, Rangiora
- Gladstone Park, Woodend
- Karen Eastwood Park, Pegasus
- Ohoka Domain

4.2.2. The events were promoted through a letterbox drop in the immediate vicinity of the park, signs on the park entrances, newspaper advertisements, Facebook messages and on the 'Neighbourly' sites for each town, respectively. Other local avenues of promotion such as the Woodend Community Association also assisted with advertising.

4.2.3. At each event, the games from the Community Trailer were set out for casual play and at times activities such as sack races and tug of war were organised by staff. Background music was provided through a portable PA system. Free hot sausages in bread were provided; along with free ice creams or coffee as an incentive for residents to engage in the Greenspace consultation around park use and feedback. A range of Community Information Resources was available for residents to take away. E.g. Welcome Bags, Chatter Magazine, brochures and directories.

4.2.4. Community Team staff conducted roving survey interviews, asking attendees a range of questions about connection with neighbours and the acquisition of community information

4.2.5. Councillors and Community Board members provided wonderful support at all seven events, manning barbeques, filling out surveys and engaging with residents, who were delighted to have such support from elected members. Additionally Neighbourhood Support staff were able attend all but the first two events.

4.3. Community Engagement Opportunity

4.3.1. The Neighbourhood Barbeque project serves as a catalyst to encourage neighbours to meet, normalising the use of a local park and allowing the community surrounding it to build relationships with each other. Community Team staff utilise these events to gauge the extent to which people across the District

are connected, while gaining a picture of the general social wellbeing of local residents.

4.3.2. The barbeques create an easily accessible opportunity for residents to engage with elected members, so that the voices of local people can inform local decision-making processes.

4.3.3. This project enables Greenspace staff to directly engage with residents regarding any potential development of those parks, aiming to make spaces user friendly to those residents. There is significant evidence related to the value of communities feeling a sense of ownership of their local Greenspaces. Such spaces are less likely to be targeted by vandals and antisocial behaviour.

4.4. **Cost per Event**

This project is funded out of Community and Greenspace Team budgets. Project Cost Breakdown is as follows:

- Gas appliances $70
- Sausages $80
- Bread $20
- Sauce $10
- Lollies (for lolly scramble) $20
- Sundry serving and cleaning items $20
- Sunscreen, Sanitiser $ 2 (pro-rata across 8 BBQ's)
- Transport Cost $30 (average, with max 40km return trip)
- Average Staff and admin cost $ 150

Total cost per event is $402, or approximately $3,200 over the season and costs are kept to a minimum with staff brokering deals on the cost of bread, sausages, etc.

4.5. **General Results**

4.5.1. The benefit of this project is significant. Total reach over eight BBQs averages at direct engagement with around 500 residents around issues, supports and opportunities that affect them. This is very much in line with broader engagement for key community consultations.

4.5.2. Throughout the series, staff have observed many conversations between people who have realised that they live down the road from each other and have never really met. Survey responses support this, with, on average, 82% of those surveyed reporting having made a new connection and 77% indicating that they would definitely or maybe connect with that neighbour again in future.

4.5.3. Sadly, at each BBQ staff encounter residents who are socially isolated and/or have specific needs for support from local services. We have been able to provide appropriate information to ensure that these people do not fall through the gaps.

4.5.4. At a recent BBQ in a less affluent area:

- Staff were able to connect one attendee with an opportunity for suicide prevention and wellbeing education for men in the large scale business that he works in.
- Staff linked a young father, suffering the effects of a relationship break up into opportunities to involve his children in local activities.

- We provided an opportunity for two parents who had intellectually challenged children to get some time out
- Importantly, we have provided a no cost, family friendly activity that is safe and accessible to those with little income, in high rental/social housing neighbourhoods. All of this contributes to making the Waimakariri a happier, healthier, safer and more resilient District

4.5.5. Staff will present a detailed overview of evaluations, as part of the presentation of this report to the Community and Recreation Committee.

4.6. Reflections and Next Steps

4.6.1. Areas with residents associations have stronger connections to their neighbours and their communities. These are the ones that tended to have higher turn outs and have supported the promotion and organising of these events. These communities also had an awareness of who was excluded or on the outside of the community and some of the causative factors for the exclusion/isolation. There is value in working with these communities to support connection and integration of newcomers and those who are social isolated.

4.6.2. There are also communities in some of our older urban suburbs that would benefit from increased levels of connection and neighbourly interactions. E.g. Discussions, observations and evaluations indicate that Good Street/Durham Street residential area is an example of a community that would benefit from an increased level of community.

4.6.3. Neighbourhood Support North Canterbury is in the process of appointing an interim manager for their service. Once this manager is appointed community development staff will support them to increase their capacity and capability to apply a community-led approach to neighbourhood connection. - Whether informal relationships and meet ups, or more formal neighbourhood support.

4.6.4. In terms of locations chosen, staff have reflected that, with turnout at Gladstone Park very low, future events in Woodend should be run at the smaller parks in that community. Furthermore, with increased capacity some of our outlying rural communities could benefit from such events and consideration has been given to the potential use of local rural halls.

5. COMMUNITY VIEWS

5.2. Groups and Organisations

Through its various working parties, project coalitions and steering groups, the Community Team has established and maintains an in-depth working knowledge of the Waimakariri District and the physical, socio-economic and environmental factors that affect the quality of life of our residents. Collectively collaborating with well over 300 community, business, education, government and non-government stakeholders, the Community Team facilitates a community-led approach to its work.

5.3. Wider Community

Broad community engagement is an important part of the work of the Community Team. This ensures a community-led approach that is relevant to all with a stake in creating a safe, healthy, connected and resilient District.

6. IMPLICATIONS AND RISKS

6.2. Financial Implications

6.2.1. Total cost for these events is approximately $3,200 shared comfortably between Community and Greenspace Teams project budgets

6.2.2. Typically facilitation of a collaborative approach to addressing key connection, resilience and wellbeing typically translates into at least triple return on investment, in terms of community-benefit generated by partner contribution and a related increase in outputs produced.

6.2.3. Community Team staff typically assist with the acquisition of external funding for some of the key projects that are identified by the networks that they support.

6.3. Community Implications

The application of an evidence-based, community-led approach to this work ensures the development of sound, relevant initiatives that empower residents to plan a part in creating a safe, healthy, connected and resilient District

6.4. Risk Management

The Community Team maintain strong relationships with internal (Council) and external stakeholders to ensure that initiatives are community-led and sustainable.

6.5. Health and Safety

Health and Safety considerations are included in planning.

7. CONTEXT

7.2. Policy

This matter is not a matter of significance in terms of the Council's Significance and Engagement Policy.

7.3. Legislation N/A

7.4. Community Outcomes

The work of the Community Team aligns with the following Community Outcomes:

- Effect is given to the principles of the Treaty of Waitangi
- There are wide ranging opportunities for people to contribute to the decision making that effects our District
- There is a safe environment for all
- Public spaces and facilities are plentiful, accessible and high quality
- People are friendly and caring, creating a strong sense of community in our District

7.5. Delegations

None

Tessa Sturley
COMMUNITY TEAM MANAGER

WAIMAKARIRI DISTRICT COUNCIL

REPORT FOR INFORMATION

FILE NO and TRIM NO:	GOV-01-04 / CMS-09-10-02 / 210312042030
REPORT TO:	Community and Recreation Committee
DATE OF MEETING:	23 March 2021
FROM:	Tessa Sturley – Community Team Manager
SUBJECT:	COMMUNITY TEAM UPDATE – Social and Health Sector Networks
SIGNED BY: (for Reports to Council, Committees or Boards)	Department Manager / Acting Chief Executive

1. SUMMARY

1.1. This report provides an overview of three key networks supporting the health and wellbeing of Waimakariri Residents:

- Waimakariri Health Advisory Group (WHAG)
- Social Services Waimakariri
- The Waimakariri Access Group

1.2. Recent general meeting minutes for each group are attached to this report.

1.3. Community Development staff facilitate or actively support all three networks and their associated work.

1.4. The report details key activities and emerging issues related to the role of each of these networks and to the physical, mental and emotional wellbeing of Waimakariri Residents.

1.5. It includes an overview of other locally regionally centred activities, supported by Community Team staff, in relation to health and wellbeing.

1.6. This report does not specifically cover Age-friendly, Suicide Prevention and Family Violence projects. These are extensive pieces of work in their own right and are addressed with a community-led approach through their own steering groups, facilitated and supported by Safe Community and Community Development staff.

Attachments:

i. Minutes of the February meeting of the Waimakariri Health Advisory Group (Trim # 210311041823)

ii. Minutes of the December and February meetings of Social Services Waimakariri (Trim #s 210311041829 and 210311041818)

iii. Minutes of the February meeting of the Waimakariri Access Group (Trim # 210311041852)

2. RECOMMENDATION

THAT the Community and Recreation committee:

(a) **Receives** report No. 210312042030

(b) **Notes** the extensive range of networks supported by the Community Team

(c) **Notes,** in particular, the role that Community Development staff play in supporting the ongoing work of the Waimakariri Health Advisory Group, Social Services Waimakariri and the Waimakariri Access Group.

(d) **Notes** Community Team staff involvement in regional groups and networks that promote and facilitate health and wellbeing.

(e) **Notes** the significant value of the collaborative partnership between community development and social services Waimakariri in the addressing of issues relating to social wellbeing.

3. BACKGROUND

3.1. Networks Supporting the Health and Wellbeing of Local Residents

The Community Team has established, and continue to support, a number of local networks that apply a collaborative approach to providing a happier, healthier and more accessible Waimakariri District.

Community Development staff support for each of these networks includes:

- Facilitation of meetings and associated administration
- Development and review of Terms of Reference, policy and protocols
- Strategic and Project Planning
- Community Engagement
- Promotion and communication
- Project evaluation
- Support for the acquisition of project funding
- Capability building: Helping them to establish working groups and empowering them with the skills, information and resources they need, to collectively translate their ideas into action.

This report focusses particularly on three health and social sector networks. These are:

- Waimakariri Health Advisory Group
- Social Services Waimakariri
- Waimakariri Access Group

It also focusses on related local and regional networks related to key health and wellbeing issues.

4. ISSUES AND OPTIONS

4.1. Waimakariri Health Advisory Group (WHAG)

The Waimakariri Health Advisory Group continues to meet bimonthly, supported by the Community Team Manager. Its role is to share emerging issues and opportunities and identify any appropriate action to address them. – Typically advocacy.

Key developments and/or issues raised in recent months have included:

4.1.1. Wait lists

As detailed in 4.2.4, below the group has identified a potential opportunity for cross-agency referral, particularly in the mental health sector, to ensure that clients can gain quicker access to support.

4.1.2. Pending COVID vaccines

Health providers report concern over managing case-load, with pending large scale COVID-19 vaccinations, particularly with these coinciding with nationally driven measles and general flu vaccination.

4.1.3. After Hours Service Provision

Discussion centred on hours and operation for this planned service, which will be located on the Rangiora Hospital site.

4.1.4. Minutes of the February meeting of The Waimakariri Health Advisory Group are attached to this report.

4.2. Social Services Waimakariri

4.2.1. The Community Team Manager sits on the Management Group for the Social Services Waimakariri Facilitator role and is an active member of the Network.

4.2.2. This relationship has been particularly valuable throughout the COVID-19 Response and planning and delivery for key COVID Recovery projects, where community development staff work alongside the facilitator to engage and connect the social and community sectors to affect positive social outcomes for our communities. E.g. Next Steps Website Development, Next Steps Facilitator role development, business and social sector connection for business owner support works and Food Security

4.2.3. This collaborative relationship has also been beneficial in developing a proactive response to needs identified in the 2019/2020 Council-led Housing Needs Assessment, with the development and dissemination of a survey of motor camp users, schools, churches, police and social service agencies to ascertain the extent of local need for transitional and emergency housing.

4.2.4. A link between the Social Services Waimakariri Facilitator and the Waimakariri Access Group has resulted in prioritisaion of a wait list project to ensure that those seeking help can access it more quickly, though cross referral from agencies offering similar services.

4.2.5. Minutes of the December and February meetings of Social Services Waimakariri are attached to this report.

4.3. Waimakariri Access Group

This group is currently supported by the Age-friendly Waimakariri Facilitator as part of an objective of the Age-friendly Plan to support a more accessible district for our older residents. Current key priorities are as follows.

4.3.1. Engaging those who have Lived Experience of Disability

With a review of the Accessibility Strategy 2017, due in the 2021/2022 financial year, the Access Group have developed a survey of those who have lived experience of accessing local services, spaces and places, information and opportunity. The survey will be disseminated via service providers, older person's networks and promoted in printed and social media.

4.3.2. Getting the able bodied to recognise the challenges

The group has agreed that their next awareness raising focus will be on the appropriate use of disabled parking permits. One planned means is to encourage the utilisation of Council's 'Snap Send Solve' app to report misuse of accessible parking space and the hazardous placement of signage in the District's business centres.

Another means to raise awareness will be to gather and tell the stories of those who suffer the effects of such actions. These stories will be told in local printed and online media.

4.3.3. Making our Town Centres more accessible

There is much evidence that, in failing to make their premises accessible to all residents, businesses ultimately limit their income. A good example is that a 'not-accessible' restaurant might miss out on a 20 person billing because a wheelchair bound family member can't get in or around the full premises.

The Access Group are currently developing a resource that will be promoted and distributed to local businesses, encouraging them to look at their business in terms of its accessibility to all. – A bit of a checklist. The plan is to promote this through business networks and associations and distribute it widely across the local business sector

The group will continue to encourage local business owners and Council staff to engage in accessibility 'walk' audits of our town centres. This practical exercise involves wheelchairs, crutches and vision impairment glasses, giving a tangible experience of what it is like for our mobility impaired residents to use local business facilities.

Experiential training is typically offered to Council staff and management from relevant departments, to build understanding of the difficulties related to impairment. The intention is to facilitate better consideration of accessibility in planning and project delivery.

4.3.4. Social Media Profile

The Access Group Facebook page serves as a means to raise awareness of issues and opportunities, relevant to those affected by physical or cognitive impairment. https://www.facebook.com/WaimakaririAccess/

4.3.5. Minutes of the February meeting of the Waimakariri Access Group are attached to this report.

4.4. **Healthy Greater Christchurch – Waka Toa Ora**

Led by Canterbury DHB, Waka Toa Roa is a network of organisations active and interested in the health and wellbeing of the Canterbury region. It is based on the World Health Organisation approved 'Healthy Cities model.

The Waka Toa Ora network has acquired over 200 signatory organisations to its charter. Signatories agree to work together to promote, protect and improve the health and wellbeing of people and whenua/land in Canterbury.

The aim is a regional approach to enhancing their efforts through networking, sharing information and collaboration, as follows:

- Forge a common vision for a healthy region.
- Foster healthy relationships between diverse agencies and sectors, from 'grassroots' groups to government agencies.
- Enable flexible, collaborative and prompt responses to emergent health issues.
- Ensure all policy incorporates a health perspective.

The Community Team Manager is a member of, and regularly reports to the Waka Toa Ora Steering Group. This is an alliance that forms the Health and Wellbeing strand of the Resilient Greater Christchurch Strategy. It aligns well with the Safe Community Model and our District's status as an International Safe Community.

Our role on the Steering Group is to provide input regarding emerging issues and opportunities related to the health and wellbeing of Waimakariri Residents, as gleaned from the various networks supported by the Community Team.

4.5. **Regional Collaboration – Active Canterbury Network update**

As part of their wellbeing and falls prevention portfolios, Community Safety facilitation staff attend meetings of the Active Canterbury Network. This ensures that recreational planning and opportunity is in line with regional and national strategies.

The Network met in early February to plan their activities for the year ahead, focussing on four areas:

- Encouraging older adults to be more physically active,
- Connecting community activity providers with affordable facilities,
- Raising awareness of the benefits of exercise for mental health and wellbeing
- Promoting active transport particularly cycling.

A range of new sports and recreation facilities are due to open across the region in 2021 and 2022 including Waimakariri's indoor court and sports facility, Christchurch City Council facilities in Linwood and the City Centre, and the Selwyn Sports Centre opening in less than 2 months. He Waka Tapu are also currently completing work on a new community gym facility in Aranui.

4.6. **Regional Funding Advisors Network (FAN) Hui**

Community Development staff attended the first gathering of Funding Advisors for 2021 in mid-February. The Network has representation from a broad range of Central and Local Government and philanthropic funders. It is valuable for staff to remain well connected with funding advisors to keep up to date with current trends and priorities as well as being able to share our observations and experiences of working closely with community organisations who are reliant on funding.

Guest speakers for this meeting included Selwyn District Council, Business Mentors and Community Capacity Accounting. It provided a useful opportunity to connect face to face with partners who we be working with to deliver local 2021 Not for Profit capacity and capability building workshop series. These cover funding, governance, strategic planning, managing volunteers, marketing and promotion, health and safety and privacy act training. Even with lockdown, last year's programme saw excellent attendance

5. COMMUNITY VIEWS

5.2. Groups and Organisations

Through its various working parties, project coalitions and steering groups, the Community Team has established and maintains an in-depth working knowledge of the Waimakariri District and the physical, socio-economic and environmental factors that affect the quality of life of our residents. Collectively collaborating with well over 300 community, business, education, government and non-government stakeholders, the Community Team facilitates a community-led approach to its work.

5.3. Wider Community

Broad community engagement is an important part of the work of the Community Team. This ensures a community-led approach that is relevant to all with a stake in creating a safe, healthy, connected and resilient District**.**

6. IMPLICATIONS AND RISKS

6.2. Financial Implications

There are no significant financial implications for Council in relation to the content of this report. However, Community Team staff will assist with the acquisition of external funding for some of the key projects that are identified by the networks that they support.

6.3. Community Implications

The application of an evidence-based, community-led approach to this work ensures the development of sound, relevant initiatives that empower residents to plan a part in creating a safe, healthy, connected and resilient District

6.4. Risk Management

The Community Team maintain strong relationships with internal (Council) and external stakeholders to ensure that initiatives are community-led and sustainable.

6.5. Health and Safety

Health and Safety considerations are included in planning.

7. CONTEXT

7.2. Policy

This matter is not a matter of significance in terms of the Council's Significance and Engagement Policy.

7.3. Legislation N/A

7.4. **Community Outcomes**

The work of the Community Team aligns with the following Community Outcomes:

- Effect is given to the principles of the Treaty of Waitangi
- There are wide ranging opportunities for people to contribute to the decision making that effects our District
- There is a safe environment for all
- Public spaces and facilities are plentiful, accessible and high quality
- People are friendly and caring, creating a strong sense of community in our District

7.5. **Delegations**

None

Tessa Sturley
COMMUNITY TEAM MANAGER

MINUTES OF A MEETING OF THE WAIMAKARIRI HEALTH ADVISORY GROUP

Held at 6.00pm

on Tuesday 2 February 2021 – in Room 18

Rangiora Hospital

PRESENT: Tessa Sturley, Cathie Sinclair, Murray Clarke, Jason Williams, Philip Redmond, Jan Pentecost, Sarah Barkle, Nicki Carter, Catherine Dowle, Sarah Saunders, Lorna Martin, Sharon Lindley, Mary Connors, Eris Le Compte (minute taker).

APOLOGIES: Mayor Dan Gordon, Andrea Allen,

IN ATTENDANCE:

WELCOME: Cathie Sinclair welcomed everyone to the meeting.

Item#	
1.	**CONFIRMATION OF MINUTES Zoom meeting TUESDAY 4 August 2020** Minutes were confirmed as an accurate record of the August meeting. **Moved: Cathie Sinclair** **Seconded: Catherine Dowle**
2 **2.1** **2.2**	**MATTERS ARISING FROM PREVIOUS MINUTES** **6.5: Child Health:** *'Catherine is working alongside Mana Ake and gearing up for the second round of HVG vaccinations'* – this should read – **HPV vaccinations.** **6.7: Physiotherapy:** A discussion has taken place regarding linking younger people with older persons.
3. **3.1**	**CORRESPONDCE IN** Two applications have been received for off licences. One from Juniper Distillery for manufacture and sales of liqueurs and spirits. Another for a general liquor outlet. Tessa will circulate the details and Cathie suggested there may be a need for a group discussion. Philip Redmond expressed a Conflict of Interest due to his position on the District Licencing Committee.

4.	**CORRESPONDENCE OUT** Nil
	UPDATES **Waitaha Primary Health**. Sarah Barkle Medical staff found the year of 2020 rather exhausting due to Covid. This year expected to be much of the same with preparations and promotions being undertaken for measles in the 15-30 age group; this will be followed by flu injections and then the preparations will start for Covid-19 injections. A successful Parenting Week was held in Ashburton recently. An incredible parenting programme will start in March, speakers are being organised but no further information available at this stage. Possible round table discussions with various Rangiora social agencies with an emphasis on younger parenting. There are lengthy waiting lists for some children's needs. On 25 February at the Glasnevin truck stop, fruit and wellbeing advice will be handed out to truck drivers. Tessa announced plans of six workshops to be held in the future and she will circulate details around this. This will be an opportunity for people to get together and for ongoing collaboration. **ACTION: Tessa to email details of the six planned workshops.** **Community Board Representatives** Murray Clarke A meeting of the Licencing Committee will be held next week. Tessa will email the current applications through to committee members. **ACTION: Tessa to email the received applications for licences.** Sarah Saunders There were some difficulties in trying to procure a valid Covid test in the Waimakariri district for non-citizens of New Zealand – costing $350. Due to a lack of the required paperwork done on a test, another test was required to be carried out in Christchurch at further expense. There is no cost to New Zealand residents and all Waimakariri general practices are prepared to carry out tests. It was pointed out that not all shops in the Rangiora area have visible check in signs. This to be checked out. There are some homeless people in Rangiora who are usually dealt with promptly. The council are looking into introducing a by-law. **Social Services Waimakariri** Nicki Carter The Waimakariri Social Sector at the end of 2020 were slightly exhausted and spent the last working week of the year having down time.

A new connector worker has been employed as Next Steps Facilitator– Suzie Milne - whose job will entail social/educational/sports etc. making sure all services are accessible to all the population and also making sure they all know how to access the available social services. A website is underway. This position will also involve working with Enterprise North Canterbury and other organisations.

There is a shortage of social housing in the district. Data is being collected re the needs and requirements. Also collaborating with Police. A forum to be arranged for the future. Funding has been received through MSD to set up a food secure community supplying food in times of need. A forum has been arranged to take place at the Woodend Community Centre on 25 February – gathering information and formatting a two-year plan.

WDC Community Team update Tessa Sturley

A community hub is to be established in Kaiapoi, mainly for learning skills etc. This will have the potential for social enterprise.

A free Summerfest will be held in the afternoon of Saturday 13 February at Dudley Park. An outdoor family fun event.

The Community Team are working with the construction industry on up-skilling and what is required.

A professional development workshop is planned for the arts and the not-for-profit sector.

Child Health Catherine Dowle

Some parents have anxieties around Covid-19 but are working through their hesitancies. All looking forward to when the vaccines arrive. HPV vaccines are still being undertaken for Year 8 students. Consent forms will be distributed shortly.

Councillor Representative Philip Redmond

WDC are still working through the Long-Term Plan and trying to keep Waimakariri rate increase as low as possible.

The establishment of a community hub in Kaiapoi.

There sometimes can be a limited time to lodge objections to licensing applications when minutes are circulated.

Youth Development Update Tessa Sturley

Three items of interest:

- Youth Employment Expo
- Youth Friendly Welcoming
- Youth Spaces

Physiotherapy Mary Connors

The package care funding from CDHB has been reduced for chronic illnesses.

A computerized Covid package has been emailed out to clients and some have been connecting by Zoom. However, in some areas there can be a downside with connections.

Midwifery – Rangiora Hospital Sharon Lindley

Appointments have been carried out through Zoom. Christchurch Women's Hospital have been consulting via Zoom which works well for many, but not all.

General Practitioner Lorna Martin

Telephone consultations are not always suitable for all - there is a charge for this. Clients get a cheaper rate when enrolled with a general practice.

Planning is well under way for the new medical centre to be built in the Rangiora Hospital grounds. It is expected to open in 2022 and will eventually hope to offer a 24 hour service and observation beds.

Nurse Practitioner Jason Williams

The Oxford clinic has been looking at the delivery of care over the past few months and how they can deliver services better.

A Covid-19 webinar will take place next week.

Older Persons Health Jan Pentecost

Problems are looming for many people over the age of 80 who do not have either the knowledge about or possess internet access. This relates mainly to the banks who are discontinuing the use of cheques as from end June this year. Some elderly persons are quite stressed out about it.

A meeting has taken place with the CEO of Nurse Maude regarding carers not turning up for clients. This is a nationwide problem throughout New Zealand.

Not everyone is aware of the fact of Christchurch Hospital operating a free taxi service to Rangiora when being discharged from hospital and having no other way of returning to Rangiora. This should be publicized more.

ACTION: Tessa to investigate organising a way of teaching digital knowledge to the elderly in the region.

	Please forward reports to Tessa prior to her compiling the agenda. This does save much time at meetings. Tessa will diarise and email out reminders prior to meetings. ***Reports should be forwarded to Tessa by 30 March for meeting on 6 April 2021.*** ***tessa.sturley@wmk.govt.nz. Thank you.*** **Meeting closed at 7.58 pm** **Next meeting: Venue to be advised for 6 April (just after Easter weekend)** _____ _____ Chair Date

SSW Advisory Meeting Minutes

Monday 14th December 2020

1pm – 3pm – Rangiora High School Board Room & Zoom

Chairperson: Penny Taylor

Present: Penny Taylor (Chair), Vicki Lucas, Kirstyn Barnett, Glenda Miller, Tina Robinson, Deirdre Carroll, Deirdre Ryan, Rhea Duffy, Ronel Stephens, Stephen McDaniel, Martin Pugh, Karen Stewart, Renee Burns, Anna Raines, Tiaki Leathers, Nicki Carter, Nicky Taylor, Sarah Campagnolo.

Via zoom Sarah Saunders, Trish Hughes

Apologies: Avadene Broeren Community - St John of God, Dawn Armitage - The Darnley Club, Ange Wylie - Idea Services, Craig Watson - Pegasus, Darrell Stick - Police, Ellen Zhou -Partnering for Outcomes, Gwenda Kendrew - Aviva, Nathan Beale - Vision West, Simon Templeton - Age Concern, Vimbayi Chitaka - Rata, Annie Fechney - Rachels House, Tracey Fitzgerald - Odyssey Christchurch, Louise Waho-Heather, Jo Ealam.

Tessa Sturley for lateness

In Attendance: Nicki Carter, Lynda Whitlow, Lynley Beckinsale

The meeting opened at 1.07 pm with a Karakia

Penny welcomed everyone to the meeting.

New Members:

Sarah Campagnolo - Oasis Problem Gambling

Louise Waho – OT Manager

Around the table introductions: Those in attendance and on zoom introduced themselves.

Presentations:

Lynley Beckingsale – WDC Social Impact Assessment – Gambling in the Waimakariri District, there are two gambling polices, statutory polices are due to renew 2021. A review has not been undertaken for nearly 10 years; there is a social impact assessment underway for this round.

How do we know we have a problem? It is hard to pinpoint due to many issues - untruths about extent of a person's gambling, links to family violence, mental health issues etc.

Consultations will be next year, WDC will be gathering information from agencies who have clients coming through in order to identify issues, they would like these fed back. There is a sinking lid policy for number of machines. Does the total include allowance for growth of population? When closer to reviewing the Policy it will be sent to SSW Group for comments before the public release.

There is a tension between community funding and the cost to the community. The assessment will include what impact there is on the community and where funding goes. 100% of the money comes out of the community; however only 30% comes back. The racing industry also gets funds from pokies. Eight or nine trusts get money,

55% goes to sports, 25% to community services and 20% to community groups. 40% from problem gamblers is not going back to social services, there are policies many agencies have to not accept gambling funds. Lotteries is not viewed as being as dangerous as pokies.

Are there any stats on Maori? population - sheet with totals "Pokies by numbers" (sent with Agenda) cultural celebrations i.e. Diwali, Chinese New Year etc add to gambling. If there are no machines, will people go elsewhere? There is an overlap between pokie and online, these are different populations, taking pokies won't stop it but will reduce population of all groups.

Impact for social inclusion for older people? Pokies are a place to go to connect. Only the closure of a venue will remove pokies, currently not increasing numbers/access.

Working with venues to provide alternative entertainment, i.e. music, bingo. Pokies give instant feedback/event every second, others are slower, less addictive.

WDC comparison to Christchurch? Not looking at changing what is there. WDC 163 machines ability to go to 280, Selwyn capped 140, Christchurch has a sinking lid policy, information is in reports sent with notice of meeting.

There is a white paper for sports clubs to get them away from pokies. If there are any other comments please send to Nicki to send on to the advisory group.

Dierdre C offered assistance from the Marae.

Sarah C has been invited to come to SSW.

Lynley left meeting 13.33

Sarah is with PGF, Nicky with Oasis.

Tessa joined meeting 13.34

Sarah Oasis go to services, train professionals how to screen and refer. Will develop a plan with the lead professional and client. 20 to 30% crime is related to gambling, example - can drink a bottle of vodka pass out and not drink more but can gamble 24 hours. Loop boxes e.g. Fortnite spending money to get tools for game, a child with access to credit card can run up large amount.

Gateway habit forming. Games and machines are designed to increase addiction. Other addictions overlap meth alcohol, can go any time to gamble. Used to clean money by putting through machines.

Gambling can be perceived as not a problem, but they can feed into each other. Sarah and Nicky can come to speak at organisations.

Nicki also invited Nicky to come to SSW meetings.

Minutes of last meeting: 19th October 2020 circulated sign up for MHERC emails they provide a lot of training.

Nicky and Tracey did all actions from minutes. Dierdre to provide Kirstyn Mana Ake info, Aviva info sent, Trish sent info to Nicki who sent it on.

Minutes to be accepted:

Moved: Kirstyn Barnett Seconded: Deirdre Ryan

Matters arising from last meeting:

Update from Nicki Carter – SSW Facilitator

Facilitators Report – Tabled

Housing – Campground Survey – anyone interested in helping? assessing need from those who are permanent or temporary in campgrounds. Going in as performing a post- Covid check with housing conversations.

Inform and fill gaps for WDC housing needs assessment - leverage for need of social and transitional housing.

Wellbeing Event for Social and Community Sector. Worker wellbeing - already have Last Thursday club at Winnebago's. Ronel investigating, looking at a retreat, dinner and dance wanting suggestions.

SSW Strategic Plan – Mgmt. Group – November 2020 – update. Plan emailed to members.

Operational Plan 2021 - embedding forums and focus groups, food rescue now part of this.

Reinvigorating relationship with WDC. Nicki developed a strong relationship with WDC.

Please get back to Penny with any other issues. Tessa looking at website people who aren't used to accessing support – developing a website which will be a one stop shop. Please network it in the community so people will know where to go – it is called Next Steps website.

This can be accessed by public, linked with mapping used over Covid to show need in communities. SSW website will go and will be part of this, WDC will run website, stand-alone website but will have links of the WDC website. People come to WDC for help.

Forums:

Food Secure Forum 25 Feb 12 -3 forum for anyone interested in food security

Housing forum – Campground housing survey will inform the forum – date TBA

SSW meetings have been set bi-monthly and forums will fit in around, there is a change of meeting venue and time in 2021, members have been sent calendar invites by Nicki.

Should need arise for Covid will switch to zoom. Thanks to WDC for use of venue.

Agency Update:

Vicki - Community committee for International Day of Older Persons held at Kaiapoi Golf Club. Mini expo at Waikuku Beach for older persons showing what could be available. Social worker for older people busy at capacity.

Tina - mini youth expo for employment was held at Rangiora Service Centre to show what was available. 70 young people with parents attended. This was held as we were unable to hold the Employment Expo this year due to Covid.

The unemployment register is dropping. There could be hidden unemployment, i.e. less hours, income combined with partner means do not qualify for a benefit. Net loss in 12 months to September was 260, jobs have gone but more created.

It is really positive for North Canterbury. Canterbury District is recruiting 40 case managers, 5 of these will be based in Rangiora. Every W&I office is getting more staff to deal with the huge volume of work.

Anna - New users from job losses - increase in waitlist for support. Lack of stock on shelves, is an example of flow on effect. People not statistically visible.

Underemployed outstrips unemployed.

Gambling stress, can self-refer to Sarah, doesn't need to be major gambling. Oasis the same as long as issues linked to gambling. Sarah does home visits. Oasis have place in Rangiora. Comcare have space that can be used.

Deirdre C - Marae, Tues evenings language well used, great take-up. Wed evening hold a programme for children to help reading, bringing families back to the base the Marae. Ngai Tahu corporate had Christmas party at Marae; bus trip along new motorway Mayor of WDC and Chch on bus. Healthy day at Pa starts last Friday Feb. All invited.

Sarah and Nicky (Oasis) left meeting

Deirdre R - a lot of recruiting, people shifting roles waiting to see what happens with Mana Ake, this ends June 2021 at the moment.

New role working with young people with addictions. .5FTE Emma Powell starting in the role in January.

Helping young people to access services; full time role helping young people move out of OT care in to the community. Any referrals for someone to fill the role?

Karanga Mai community connector starts in February, via Covid 19 funding to June 2022.

Kirstyn - feedback in mental health of young children who do young children see - Comcare deal with age 18 upwards, Vicki PSUSI look after children up to age of 18. Mana Ake is at schools, health pathways MoE employed extra 2 staff. Please keep council involved via Tessa. Explore work with behavioural and anxiety issues have a long wait list to be assessed. Sarah S sometimes upskilling GPs can be hard. Health practitioners are going in to GP practices.

There is a lot for GPs to keep up with.

Let Sarah know if there is a need she can help with. i.e. run caring for carers to support people in the community. Another Truckstop at Waipara has been held - trying to have light health session 10 minutes while truck is being checked.

Health portal - working with practice owners to enable clients to have access to online bookings with GPs and access own health and wellbeing info; to setup on portal need to go to practice who will set up access.

Kirstyn left meeting 14.38

Martin - WDC neighbourhood connection and social inclusion wanting to know where gaps are in WDC area.

Tessa - local arts sector to develop arts strategy. This will bring stakeholders from art community to brainstorm arts strategy in the local district.

Housing - will also take in info from others such as police as part of the campground survey.

Kaiapoi looking at how to connect people and develop skills for people to upskill.

Glenda - trend of people being left behind, lockdown i.e. change of livery for ECAN buses causing issues and no consultation. Initiatives for Covid not inclusive of disabled people.

Notices & General business:

Dierdre LGG children's team funding via OT is going to cease. Coordination will move to the community and become a community owned entity. Rural not well represented:

Deirdre nominated by meeting to be representative for North Canterbury, is everyone comfortable with Deirdre representing sector? She could have a partner to assist her.

The meeting ratified that Deirdre be part of Children's Teams Local Governance Group

Ronel - Winter Wonderland at Oxford school until 24th Dec. for kids. Will put info on Trusts Facebook page.

Police - serious crime reducing in this area. They have been working a lot in the community on this.

Family harm increasing, trend just starting to look at causation. FV Police rep, will be

Backfilling as staff seconded to other areas for Covid. Family harm still important.

SSW Advisory Group bi-monthly meetings schedule 2021

Kaiapoi Library – Ruataniwha Room - 2pm – 3.30pm – note: Change of Venue & Time

- 22nd February
- 10th May
- 28th June
- 23rd August
- 11th October
- 13th December

The Meeting closed at 15.01

Social Services Waimakariri Meeting Minutes

Monday 22 February 2021

Held at

Upstairs Meeting Room, Kaiapoi Library, 2 – 3.50pm

Present: Jo Ealam, Ronel Stephens, Nicki Carter, Sarah Saunders (left 3.38pm), Ian France, Tina Robinson (left 3.40pm), Louise Waho (left 3.40pm), Sharon Grant, Glenda Miller, Trish Hughes, Gwenda Kendrew, Sarah Campagnolo, Tessa Sturley (late arrival), Kirstyn Barnett (late arrival).

Apologies: Craig Watson – Pegasus Health, Ellen Zhou – Partnering for Outcomes, Martin Cole – Comcare, Mel Noonan – NZ Police, Nathan Beale – Vision West, Theresa Evans – Citizens Advice, Dawn Armitage – Darnley Club, Karen Stewart – Rangiora High School, Tessa Sturley – WDC (lateness), Kirstyn Barnett – (lateness), Deidre Ryan – CWNet, Glynn Taylor – Student Communication, Penny Taylor – Emerge Aotearoa, Lynda Whitlow – WINZ, Vicki Lucas – Presbyterian Support, Tiaki Leathers – Vision West.

The meeting opened at 2.08 with a Karakia.

Everyone was welcomed by Ronel Stephens in the absence of Penny Taylor followed by round the table introductions. New members to the meeting were Ian France from Person to Person Trust in Kaiapoi and also the newly appointed Oranga Tamariki Manager, Louise Waho.

A minutes silence was observed as a tribute to the 10 year anniversary since the Christchurch earthquake in 2011. Disappointment was expressed in the fact that Kaiapoi township did not mention the significance of the 10 year anniversary, but however, the community as a whole has grown since due to the funding available since the quakes.

Previous Minutes: These have been circulated.

Minutes to be accepted:

Moved: Ronel Stephens; **Seconded:** Sharon Grant.

Update from Nicki Carter – SSW Facilitator

SSW Facilitator Report – Jan/Feb 2021

General – Admin

- Parenting Pamphlet – Term 1 – updated and distributed.
- Parenting Information & Courses distributed to the community.

- Update SSW Charter, contact list, membership pack – ongoing.

Meetings attended (outside of normal networking schedule)
- WHAG

Advocacy

Training

New SSW Members
- Sarah Campagnolo – Problem Gambling Foundation
- Nicky Taylor – Oasis Gambling
- Louise Waho – OT
- Lesley Campbell – Lifelinks

Food Secure North Canterbury
- MSD FSNC Report 1st June 2020 – 31st January 2021 – completed and submitted.
- Food bank data collection project – with WDC, Mary Sparrow, FAB
- Food Secure Waimakariri Forum to be held on 25th February 2021 – 12noon – 3pm @ Woodend Community Centre
    - FSNC 2 year plan due to MSD by 1 April 2021

Worker Wellbeing
- Last Thursday monthly get together for Social and Community Sector – 4.30pm – 6pm
- 25th February 2021 at Winnie Bagoes - 4.30pm – 6pm
- 5 attended August, 19 attended September, 6 attended October, 12 attended in November, 8 attended in January
- Great opportunity to get together monthly in a relaxed environment – no work, just relax and relationship build with each other.

Housing Needs Assessment – Waimakariri campgrounds survey
- Working alongside WDC Community Development & Mary Sparrow
- Campground survey completed and analysis being done at the moment.
- Survey to food bank clients via 4 main food banks
- Survey to community stakeholders to discuss social housing needs from organisation perspective.
- Social Housing Forum May or June 2021

Business Support in a Post-COVID Environment – Interface with Social Service & Business Sectors
- Next Steps Website – one stop shop making services accessible – this will include SSW information.
- Waimakariri Business Breakfast – 8th April 2021 @ RSA 7am – 8.30am.
    - Collaboratively working alongside ENC, KPA, RPA, OPA, WDC
    - Funding approved from MSD COVID fund

Next Steps Facilitator Role
- Susie Milne has been appointed the Next Steps Facilitator

- Operational plan has been developed.
- Governance group has been established.
- Essentially building capacity around the interface with the social and community sectors and Health, Schools, Education, Police, Businesses, Faith based organisations, Sporting etc.

Waitlist project –

- In discussion

2021 - Upcoming SSW Work Streams/Projects/Forums

Work Streams

- SSW Meeting Facilitation/Communications/Dissemination of information/New Members/Advocacy/Admin – Parenting Pamphlet / Mapping Document / Annual Report

- Social Housing
    - Campground Survey of permanent and semi-permanent residents
    - Gather information from Police, OT, social agencies.
    - Report written to add value to the WDC Housing Assessment Report
    - Nicki, Rachel and Mary Sparrow – working on this.

- Food Secure North Canterbury Collaboration
    - Facilitating/Evaluation of this project alongside Rachel Thornton

- Next Steps Facilitator
    - Interfacing the social and community sectors with Health, Schools, Education, Police, Businesses, Faith based organisations.
    - Utilising the Next Steps Website to make our sector accessible to everyone.
        - First Project: Business Support in a Post-COVID Environment – Interface with Social Service & Business Sectors – Accessibility
    - Governance Group – Nicki (SSW) Tessa Sturley & Rachel Thornton (WDC), Rhea Duffey & Ange Davidson (HDC)

- Worker Wellbeing
    - Last Thursday Club

- Waitlist and Referral Pathways – for discussion

- Sustainability Pathway for small organisations
    - 6month series for organisations to attend – working with WDC CD team follow on from Collaboration Forum.

2021 Forums

- Worker Wellbeing– Last Thursday Club – Monthly & Working with OCT on a project

- Food Secure Forum – 25th February 2021

- Business Support in a post COVID environment (social sector interface with the business community) – 8th April 2021

- Housing Forum - TBC

- Collaborative Opportunities for our Community
    - Two forums in 2021 to explore these opportunities.

Other (if time allows)
- SSW Evaluation 2020
- Youth Services – early intervention – gap
- Children's Safety Programmes – (Barnardos)

Student Communications and Safe Practices – Glynn Taylor
- Met with Glynn re: doing some short videos about SSW, BSNC, Citizens Advice and EQC
- Glynn is keen on discussing this with Penny as the Chair of SSW
- Look to start this project as we move into L1.

Emerging Issues
January 2021

September 2020
- Worker fatigue
- Anxiety – uncertain space
- High needs tamariki
- Family breakups

August 2020
- Parent Wellbeing ++
- Worker Wellbeing ++
- Inability to refer due to services being full.
- Many complex issues and stressors
- Waitlists @ Comcare & Barnadoes
- Youth early intervention services
- Stress and fatigue on carers
- Anxiety
-

July 2020
- Counselling services (CWNCT) full
- Social Worker (CWNCT) full
- Worker wellbeing and potential burnout across the sector (including education)+++++
- Youth at risk – low to medium tariff – gap in our community
- Increase in isolation + esp Older people incl low mood.
- Mental health referrals +++
- Family Harm +
- Police diverted to policing motels and hotels re: COVID isolation.
- Loss of employment and related issues such as reduced income.

- Health and mental health issues.
- Stress and anxiety issues
- Difficulties in re-engaging socially accompanied by increased apathy and intolerance, as well as getting back to previous routines;
- Relationship issues including family harm.
- Increased demand for social services and difficulties associated with supporting those in need until they can obtain professional help.
- Business owners facing losses that they may not be able to recover; and
- Housing and tenancy issues, including a shortage of social housing.

Mental Health Sector

- Self-harm and serious suicide attempts
- Waitlists
- Overwhelming pressure on young people from their schools – esp NCEA students
- Worker wellbeing +++
- Crisis support – this service is not good enough at present – wait times etc ++

June 2020

- Increase in MH referrals ++++
- Volunteers wanted ++++
- Anxiety ++
- Funding for the Social and Community Sector – concerns +++
- AOD Services being disestablished in North Canterbury ++
- Digital divide / Digital exclusion – Older persons and Disability sector ++
- Anxiety in school children +
- Stand downs in schools – increased +
- Food Security +
- Relationship issues
- Migrant & visitor visas – stranded here.
- Financial – redundancies
- Older persons – Digital divide
- Increase in the suicide space (Mel) re: change of environment, employment issues, rural aspects.
- Banks not taking cheques – issue for the elderly.
- Winter needs – bedding, clothing, heating, firewood

Nicki welcomed Susan Milne to the team who started her position today. She will be working closely with Nicki and Rachael Thornton. The position is a two-year contract aiming to build capacity within the community.

WDC Community Team is developing a website – Next Steps – which will cover community information available to everyone.

The social housing project is in full swing collecting data from camping grounds etc. as well as information provided by the food banks. Kirstyn questioned the housing of solo mothers. Tina explained that all available housing is full and there is always a wait list, especially more so now with the changes to the tenancy act. Tessa said the survey results from the camping areas will be taken to the housing forum, date to be confirmed. It was asked if there was any further information on rent increases.

Tina said the housing team at WINZ are looking at the potential of making private rentals attractive. Nicki reminded that the committee talked last year during the Covid conversation about the current waitlists and where the most demand was. Perhaps develop a spreadsheet showing the areas where the most need is? Would any group be interested in putting this together?
Glenda explained that the data is constantly changing. Problems with on-line gamers etc. Could more funding enable a gambling clinic to be set up in Waimakariri/Rangiora? There is an on-line pathway for gamblers suitable from age 14 and upwards. This can be worked with parents. Nicki said there has been discussion about listing the gambling problem on the Next Steps website. Nicki suggested to call a meeting together of interested parties for discussion.

Upcoming Forums:

- Food Secure North Canterbury – 25 February 12 noon – 3pm. Woodend Community Centre, lunch provided.
- Business/Social community Sector Breakfast – 8 April, RSA Rangiora.
- Thursday end of month club at Winnie Bagoes.

Agency Updates:

Ian France

- The Person to Person Help Trust is offering work experience in the High Street Café.
- Carers for Carers group meets every two weeks.
- Ian has yet to attend a meeting of the Men's Group. There are some challenges to men with running businesses.
- The Rainbow Pre School is administered by the Person to Person Trust.
- Organising Lonely Mondays, movie afternoons, and community involvement.

Kirstyn Barnett

There is an increase in the district on gang related crime. WDC Council have held meetings with the Police on this issue.
An adventure course is being promoted by the Rangiora Lions Club for an outdoor experience to be held near Dunedin between 7-15 May. Applications are now being received for this opportunity and to date one application has been received. Applications close on 10 March.
Working in conjunction with Rangiora High School on problems associated with car accidents and suicides. Tessa informed the group that Person to Person have ramped up their presence at Rangiora High.

Sarah Saunders

- A fun day will be held for Pacifica children in April.
- Additional St John Ambulance support is now available in Amberley.
- Health promotion – another Health Clinic evening is planned.
- Sarah will be attending the truck stop wellbeing day on Thursday 25 February.

Trish Hughes

Funding applications for the next round of Covid Lottery applications have exceeded expectations and consideration is being given to extending the closing date. The next community meeting will take place Tuesday 23 March, 10am – 12 noon in the upstairs meeting room, Kaiapoi Library.

Glenda Miller
The visually impaired are having some difficulty with the rubbish collection changes to the wheely bins. In some places in Rangiora there are problems around numbers of bins left for pick-up around bus stops with bus patrons having to circumnavigate the bins to embark on the buses. Tessa suggested to contact Kitty Waghorn at WDC or contact the Waimakariri Access Group.
Again, the housing wait list is of concern especially for people with physical disabilities.

Gwenda Kendrew
Casualties of violent domestic assaults are on the Aviva waiting list for accommodation. Low interest loans are available for those who qualify. People who do not have a protection order have a longer waiting time.
Aviva are running a 10 week course for children aged around 7-8. A pilot programme is being introduced at Ashley Primary School which is working in with the Ministry of Education.
A men's programme against violence has started in Phillipstown in Christchurch which is open to all.
Aviva is looking for new operating premises in Rangiora for their expanding service. Perhaps around 200 square metres would be required and prepared to pay up to $30,000 for an annual lease. A suggestion was to contact ComCare in Kingsford Drive, Flaxton.

Louise Waho
Louise has been appointed manager of Oranga Tamariki; she has been with the Ministry for 20 years. She is working with the National Library encouraging free books being available for children to either borrow or to keep. Some Maori books have been obtained. A pilot is running in Rangiora now and it is hoped to extend the service to all community agencies.
Louise has been contacted by the Christchurch City Council offering free swimming lessons for two terms in Christchurch.
Nicki agreed the books initiative is a great idea and suggested making contact with the Kaiapoi Teen Parenting School.

Nicky Taylor
- A Policy Review has just been undertaken on the West Coast.
- The pokies were closed during the Covid lockdown.
- There has recently been a huge increase in betting revenue which is good as far as funding is concerned.

Sarah Campagnolo
- Sarah is working with Age Concern around the health of older persons.
- It has been established that 40% of those over 65 are drinking haphazardly.
- The use of marijuana/drugs is becoming an issue.
- Sarah has offered to do presentations.

Tina Robinson
As of last Monday a Short Term Assisted Payment has been offered for people who have to take time off after having produced a positive Covid test. The application format is extremely easy and can be done on-line. Wage subsidies are not completely off the table – the administration is being done through Inland Revenue.
MSD have incentives for getting people back into work and work subsidies have been extended, as well as benefits for employers. Keep an eye on the changes to the MSD website.

Sharon Grant

- Budget are experiencing some overly complex issues when dealing with clients.
- Power companies are still accepting referrals for those who are having difficulty in paying power accounts.

Jo Ealam

- Oxford Trust now has a new youth worker and a new Oscar supervisor.
- A wellbeing day is being planned for workers and invites will go out when the date is confirmed.

Tessa Sturley

- An expo is planned for 19 May between 4 – 8 pm. From year 8. Attendance is encouraged for pathways.
- Looking at a broader project around Life Skills.
- The WDC Youth Council and WaiYouth are coordinating on safety and well-being priorities and breaking into the training sector.
- An alcohol forum will be held in April.
- The Migrant group is restructuring and will meet quarterly. Language classes to be held and becoming socially connected.
- Family Violence training will be announced shortly.
- The Neighbourhood BBQ evenings have been well received.

Notices and General Business

Query from Jo Ealam

Jo questioned regarding the update of the directory. Nicki agreed this needed to be done, particularly for those who do not have the internet.

SSW Advisory Group – 22 February 2020

We will celebrate our national Awareness Week from 8 – 14 March 2020

The theme is that Citizens Advice Bureau is celebrating 50 years of service in Aotearoa New Zealand. This means countless hours of advice to the public, providing information on everything from housing and consumer rights to immigration and employment. This is a time to recognise the thousands of skilled CAB volunteers and staff, including those in North Canterbury, who dedicate their time to providing free confidential advice and access to the rights and services people need.

The Citizens Advice Bureau has been working for positive social change for 50 years in an ever-changing world and is ready to serve the public for the next five decades and beyond.

Our North Canterbury bureau celebrated its 40th anniversary in 2018.

A people-centred service is more valued now than ever and is a service that the CAB is proud to deliver. In this age of uncertainty, we remain optimistic about the future – a future filled with change for good.

We are proud of the legacy the CAB has created and for the future it will forge. Our service remains free, trustworthy and confidential – where people can pop in and visit, call us on the phone, or contact us via our website by using live chat or sending a message.

Seeking volunteers

CAB volunteers are dedicated to giving back to their community and undertake an intensive training process that ensures they are ready for queries and issues, and to provide options based on research.

We will be advertising for volunteers in March, with interviews in April and our induction training starting on 4 May. This will be our third cohort of trainees since we reopened after the Covid-19 lockdown.

Next meeting 10 May 2021. Kaiapoi Library – Ruataniwha Room - 2 – 3.30 pm.

Lifelinks presentation by Lesley Campbell.

Meeting closed 3.50 pm.

Waimakariri Access Group Meeting – 9 February 2021

Held at the Kaiapoi Club

Present: Chris Greengrass (Chair), Phil Humphreys, Karen Humphreys, John Meyer, Shirley Farrell, Monique Fleming, Paul Jones, Joan Ward (left early for meeting), Julie Paalvast, Carina Duke, Ted Dring, Paul Jones, Karyn Ward, Karen Richardson, Eris Le Compte (minute secretary).

Apologies: Glenda Miller, Shona Powell, Madeleine Burdon, Kathy Graham, Sandra Black, Martin Pugh.

Moved to be accepted by John Meyer and seconded by Monique Fleming. Carried.

In Attendance: Tessa Sturley (WDC Community Team**)**

Chris Greengrass introduced and welcomed everyone to the meeting including the return of Ted from his travels.

Julie Paalvast from Aspire, Christchurch joined the meeting for the first time and gave a short explanation of the services Aspire offers. From their Bishopdale office they have a retail shop where disability equipment can either be purchased or hired, and a mobile van that travels around retirement homes and medical centers etc.

Confirmation of Previous Minutes:

Moved to be accepted by Chris Greengrass and seconded by Phil Humphreys.

Matters Arising:

A full discussion continued around producing a Barrier Free Accessible Flyer. Monique and Sarah Lodge have both drafted an example and various ideas were put forward. A possible approach to business owners re accessibility to their premises was suggested:

- Point out re the loss of business if not an accessible business.
- Width of door openings – not all openings accessible.
- Wheel friendly buildings – good for business.
- Check accessible toilets in businesses.
- Accreditation and visible picture of the wheelchair logo.

Tessa will investigate with the council team around putting a logo together. And Monique and Corina will discuss further.

Correspondence In:

Chatter

Out: Nil

Finance: Balance as at 31 January $4258.26

Chris asked if Sarah Lodge should be paid for any expenses she may have occurred.

Tessa explained that council now have a video camera which could be used to put a promotion together for advertising purposes.

UPDATES:

Item	Key discussion points	Action
Updates		
Karen Richardson	It has been noted that in some places the yellow recycle bins have been placed in accessible car parks. Karen has been turned down by Lifelinks for carer help. Chris suggested she contact them again and ask the reason why.	
Karen Humphreys	The ongoing problem of vehicles parking in marked mobility parks. Karen wondered if something could be done to give business owners/staff the power to ask people to move vehicles when illegally parked? New World Kaiapoi blocks off mobility parks during their December promotions. Problems with accessible hotel/motel rooms in Christchurch. Some rooms are not always as accessible as advertised.	
Ted	Drivers in Oxford are not responding to the new speed signs on Main Street. This really is a traffic/police issue where surveillance by police would be welcomed. Scooters are scooting through very fast on the Rangiora footpaths in the shopping area.	**John and Ted to discuss**
Karyn Ward	There needs to be more discussions around people who have invisible disabilities. Many conditions are not always visible. A suggestion that it would be a great idea if businesses were to once again offer chairs by counters as used to be the case many years ago. There are barriers connected with trying to arrange deliveries of small furniture items when not able to move by oneself. Tessa suggested that some church groups or Time Bank can help with this. The WDC Community Team is currently developing a Next Steps website which will be a 'go to' site when trying to find various services. This is expected to be up and running in a few months' time.	

John	It is now time to look at the possibility of all commercial buildings operating with electric doors. Although it is realized that this could take some time, could the Waimakariri Council be the first in New Zealand to carry this through? Legislation is in progress right now to change building standards. Also, a suggestion to have wider doors in houses.	
Paul	Paul was pleased to announce that at last The Warehouse have installed wheel stops in front of their building. Paul will follow up on doors in the area. Some have questioned the time delays on electric door openings.	**Paul**
Carina	More prominent signage should be placed for mobility carparks. And more publicity required around the raised pedestrian crossings.	
General business	Chris will ask both Mayor Dan Gordon and MP Matt Doocey if they will be available to attend the WAG meeting in March. As it is looking like renovations will be continuing for some time at the Rangiora Council rooms, Chris Greengrass has booked the meeting room at the Kaiapoi Club through until June.	**Chris**
	Meeting Closed at 12.48 pm **Next Meeting: Tuesday 9 March 2021. 11 am. Meeting Room, Kaiapoi Club.**	

WAIMAKARIRI DISTRICT COUNCIL

REPORT FOR INFORMATION

FILE NO and TRIM NO:	GOV-01-04 / CMS-09-10-02 / 210507073001
REPORT TO:	Community and Recreation Committee
DATE OF MEETING:	18 May 2021
FROM:	Tessa Sturley – Community Team Manager
SUBJECT:	COVID-19 SOCIAL RECOVERY UPDATE

SIGNED BY: **(for Reports to Council, Committees or Boards)**	Department Manager	Chief Executive

1. SUMMARY

1.1 This report provides an overview of Community Team activity, related to the key 'project' areas, for COVID-19 social recovery. Such activity aligns with the delivery of the Waimakariri Community Development Strategy 2015 – 2025 and COVID-19 Strategy, 2020.

1.2 Some of the activity detailed in this report relates directly to business as usual for the Community Team. However several key projects have emerged that have the potential to significantly impact on the social recovery and enduring reliance, empowerment and wellbeing of local residents. These are:

- Food security
- 'Next Steps' support and information website and facilitation
- Planning toward the establishment of a community hub that will serve as a means to connect, educate and empower the community in the post-COVID environment.

1.3 This report particularly highlights the work of FSNC (Food Secure North Canterbury) as the result of the significant funding acquired from MSD in 2020.

1.4 Another key area of note in this report is the Development Promotion and ongoing maintenance of a 'Next Steps' website, which will benefit the entire community. This has been in response to an identified need in the post-COVID environment to remove obstacles for people to access assistance as they may require it.

1.5 Collaboration will be the key to the success of our District's Recovery. This report details effort to identify and address gaps in this area.

Attachments:

i. Food Secure North Canterbury February Report to MSD. (Trim # 210506072679)

ii. Food Secure North Canterbury 2 year plan. (Trim # 210506072676)

2. RECOMMENDATION

THAT the Community and Recreation committee:

(a) **Receives** report No. 210507073001

(b) **Notes** the evidence-based, collaborative approach applied to the facilitation of social recovery from COVID-19.

(c) **Notes** that, while some of this work sits under existing portfolios, several key projects have arisen, requiring additional staff resource. These include Food Security, the Kaiapoi Community Hub, support for the newly unemployed and the establishment of the 'Next Steps' website, including the acquisition of funding for its development, promotion and maintenance.

(d) **Notes** that, with central government's significant financial contribution; and the collaborative approach, sound governance and planning applied to date, key funders, including Rata Foundation and Department of Internal Affairs (DIA) have expressed significant interest in supporting the further development of the Food Security and associated community hub projects.

(e) **Notes** that proposed funding support does not include provision for resourcing for facilitation of this, or other key projects associated with the social recovery of our District. Provision for such resourcing has been made through Council's COVID-19 Recovery fund, until July 2022. This will been reviewed in early 2022, with a staff report to Council.

(f) **Notes** that a presentation of progress to in relation to two key projects, food security and the 'Next Steps' website, will follow the presentation of this report.

3. BACKGROUND

3.1. Evidence to Inform Social Recovery from COVID-19

3.1.1. Various local stakeholders and key networks, particularly Social Services Waimakariri, Waimakariri Health Advisory Group, Violence Free North Canterbury, local iwi, schools and the Age Friendly Steering Group, have been crucial in informing and affecting timely and appropriate responses to emerging COVID-related issues.

3.1.2. Community Team staff have facilitated these networks to gather evidence from across the various sectors in our community on the impact of the COVID-19.

3.1.3. Two key pieces of such evidence have been the Social and Community Sector Survey and the recent COVID-19 Social Recovery Planning Forum. Both directly informed planning for social recovery in the Waimakariri District.

3.1.4. In terms of best practice response, evidence from early research, nationally, identified the need for increased collaboration between groups and organisations. As a result, in partnership with Social Services Waimakariri, Community Team staff coordinated a community-wide collaboration forum. The forum was funded by Rata Foundation and facilitated by Trish Hall from Thought Partners in Wellington.

3.1.5. Social recovery form COVID-19 will essentially be delivered as part of business as usual for the Community Team. However three key projects have emerged that have the potential to significantly impact on the social recovery and enduring reliance, empowerment and wellbeing of local residents.

These key projects are:

- 'Next Steps' support and information website and facilitation
- Planning toward the establishment of a community hub that will serve as a means to connect, educate and empower the community in the post-COVID environment.
- Food Security and the associated establishment of a community hub.

The food security and hub initiatives are the largest pieces of work in social recovery, not fitting with 'business as usual' for the Community Team. They therefore require additional staff resource for facilitation

3.2. Food Secure North Canterbury Funding and Governance

3.2.1. 'Food Security' has been highlighted as having significant potential to empower locals affected by unemployment and social deprivation.

By definition: *"Food security exists when all people, at all times, have physical and economic access to sufficient, safe and nutritious food that meets their dietary needs and food preferences for an active and healthy life".* (World Food Summit, 1996)

3.2.2. Food banks have reported increased demand for their services, since the COVID-19 event, with some schools reporting that up to 50% of their families have been affected. Many schools have introduced breakfast and lunch clubs and school-based food parcel initiatives. Foodbank providers and budget advice services both talk of the working poor- those whose families have lost secondary income and are now regularly relying on foodbanks to fill the gap. Demand for such services is not expected to decrease in the medium term, at least, without intervention.

3.2.3. The food security project ensures a sound, evidence based approach to developing strategies to address such demand and to empower people to source and effectively utilise good food, themselves. Some progress is already being made, with an increase in school-based growing and food prep initiatives and the emergence of one or two community pantries across the District. However these are very much a drop in the bucket, in terms of meeting demand and they do not empower people away from reliance on 'charity' and toward independent positive futures.

3.2.4. The Food Secure North Canterbury Governance Group has been established to oversee and manage the project from conception through to independence.

3.2.5. The acquisition of $690,000 from Ministry of Social Development, toward the food security project, has put our community in a strong position to attract sufficient additional funding to see the project through to its implementation.

4. ISSUES AND OPTIONS

4.1. Key Recovery Activity from September to April

An overview of Community Team-led activity over the period September to April 2020 is detailed in the tables in item 4.4 of this report. However staff would like to particularly highlight item 4.4.3, Food Security, detailed below.

4.2. Food Security

4.2.1. The Food Secure North Canterbury Governance Group has been established to oversee and manage the Food Security Project. This group was chosen

strategically to look at food security in our region. Represented on the governance group is Satisfy Food Rescue, Kaiapoi Food Forest, Kaiapoi Community Garden, Oxford Community Trust, Kaiapoi Community Support (representing the four local food banks), Waimakariri District Council, Hurunui District Council, and Social Services Waimakariri.

4.2.2. The governance group has focused on developing the foundational processes of the project. Specifically vision, mission, terms of reference, reporting templates, financial processes and logo design.

4.2.3. There has been considerable community involvement in the initial stages of this project. Local schools, social service providers, faith based organisations, community groups and service clubs have all engaged in the initiative. A community wide forum was held to inform the 2 year plan that has been developed as per our funding reporting requirements.

4.2.4. To date there are 28 collaborative partners involved in FSNC. One of those partners, the Oxford Lions club has grown and harvested ten tonnes of potatoes, and other produce that in turn, Satisfy Food Rescue has been able to distribute across the district.

4.2.5. Satisfy Food Rescue have rescued 107 tonnes of food – the equivalent of 307,888 meals to the vulnerable in our community through their networks.

4.2.6. The funding for FSNC has enabled over 800 food parcels to be delivered and acquired four new freezers and chillers for the foodbanks.

4.2.7. Kaiapoi Food Forest has had double the number of visitors and requests for education classes. They are currently looking at establishing food forests in two other locations in our District.

4.2.8. In April FSNC submitted a two year plan to MSD with the following key priorities identified:

- Increase food access
- Education and skill-sharing
- Raise awareness and involve/engage communities
- Policy and Planning
- Capacity and capability through collaboration.

4.2.9. It is worth noting that all feedback from our MSD relationship manager has been extremely positive. He considers the work FSNC is doing to be something of an example to the other fund recipients across New Zealand. We are fortunate as FSNC has been able to gain momentum due to the work our community has put in to retaining collaborative networks established post-earthquakes.

4.2.10. Food security would include the establishment of a community hub and education centre, which could serve as a base for the management and administration of the project across the District. The establishment of the hub would create good potential to create social enterprise, generating income toward ensuring the sustainability of the initiative.

4.2.11. With central government's significant financial contribution; and the collaborative approach, sound governance and planning applied to date, key funders, including Rata Foundation and Department of Internal Affairs (DIA) have expressed significant interest in supporting the further development of this project.

4.2.12. The food secure hub will be part of a planned larger-scale development on previously red-zoned Kaiapoi land. Funding for toward that initiative will be considered in line with a Kaiapoi Community Hub staff report to Council, as part of Long Term Plan deliberations.

4.3. **Overall COVID-19 Social Recovery Activity, September to April 2021**

4.3.1. Item 4.4, details Community Team-facilitated activity in relation to key issues and opportunities, as identified by the community as being relevant to the social recovery of our community from COVID-19.

4.3.2. These activities relate to the six key social recovery topics/projects outlined in the Waimakariri COVID-19 Recovery Strategy. These are, projects number:

16: Develop and Monitor Programme Implementation

17: Social and Health Sector Support

18: Increased Community Development

19: Increased support for local Community, Voluntary & Recreation Sectors

20: Local, Regional and National Health Sector liaison

21: Enhanced Migrant Assistance and Support

4.3.3. Some of this work relates directly to business as usual for the Community Team. However three key projects have emerged that have the potential to significantly impact on the social recovery and enduring reliance, empowerment and wellbeing of local residents. These are:

- Food security
- 'Next Steps' support and information website and facilitation
- Planning toward the establishment of a community hub that will serve as a means to connect, educate and empower the community in the post-COVID environment.

4.4. The tables below detail specific socially recovery activity over the period from September 2020 to April 2021.

ISSUE	COVID Recovery Strategy 'Project' Area	COMMUNITY TEAM INITIAL RESPONSE (September to April)	PARTNERS/MECHANISM
4.4.1: Informing and Planning Psychosocial Recovery Planning	16,17,18,19, 20 and 21	• Facilitation of evidence gathering, continued via a fourth iteration of the social and community sector survey of local providers via Social Services Waimakariri, with a particular emphasis on housing. • Facilitation and delivery of a Food Secure forum, as detailed in 4.4.3, below. • Development of a survey of local ethnic migrants and associated support agencies, as detailed in 4.4.10, below.	Social Services Waimakariri, Waimakariri Health Advisory Group, Ministry of Social Development, Migrants and Newcomers Group, Age-friendly Steering Group, Violence Free North Canterbury, Te Rūnanga o Ngāi Tūāhuriri, Various Council Departments

4.4.2: Support for the Newly Unemployed	17, 18 and 25	• Preparation and dissemination of easily accessible information about community supports available to those financially and emotionally impacted by COVID -19.
		• Facilitated the delivery of two Career Transition and Employment Possibilities Workshops, for locals affected by COVID-related job loss, covering:
		  • Work and Income, more than benefits
		  • Creating your own employment
		  • Re-education and career path redirection
		  • Finances over the tricky period
		  • Getting through: Wellbeing
		  • Panel discussion
		All attendees received direct advice and support to help them to transition to employment
			Work and Income, Enterprise North Canterbury, Workbridge, Social Services Waimakariri, Immigration NZ

4.4.3: Food Security	18	• Established of strong governance, with broad representation from key community service providing agencies • Food Security forum held in February 2021 and attended by 47 representatives from right across the community and social sector • Development and submission of Food Secure Waimakariri Plan	Food bank collaborative, Satisfy Food Rescue schools, churches, Council Greenspace Team, Eco-educate, Existing Community Gardens, social Sand community service providers, Timebank Waimakariri local service clubs

		• Prepared and submitted a progress report against the objectives of the Food Secure Waimakariri Plan, with extremely favourable feedback from Ministry of Social Development, regarding the quality of the plan and content of reporting. • Worked collaboratively with District Regeneration, Satisfy Food Rescue, Kaiapoi Food Forest and other key stakeholders on planning and engagement toward the development of the Kaiapoi Hub. – This has included working with three potential foundational tenants (Kaiapoi Mens Shed, Croquet and Satisfy Food Rescue) in planning to acquire sufficient funding for the facilities that each would require for their operation.	
4.4.4 Social Isolation	18	• Supported Neighbourhood Support to increase their capacity and capability; and to apply more of a Community Development approach to their role in Neighbourhoods. This has included acquisition of funding for increased coordinator capacity. Ultimately, this will provide increased capacity for delivery of initiatives that will facilitate neighbourhood level connection. • Continued the Welcome Bag initiative, roll out across schools, libraries, services centres, Real Estate Agencies and through developers in new subdivisions. A content review is currently underway and staff are looking to utilise opportunities for the preparation of the bags as a means to facilitate social inclusion and connection. • Facilitated and delivered a series of seven Neighbourhood BBQs across the District, with cumulative attendance by 340 local residents, many of whom were connected with community information and into community supports. • Provided ongoing Pastoral Care for those presenting at Council with issues. This has included support for housing, links with mental health supports, links to food and budgeting support, reassurance and links to support for some of our local addiction-affected regulars. This is a non-core, but particularly rewarding aspect of the work of the Community Team.	Social Services Waimakariri Mental Health Working Party Waimakariri Health Advisory Group Migrants and Newcomers Group

4.4.5: Digital Isolation	18	• Facilitated a collaborative approach, including engaging libraries, Wananga Aotearoa and Senior Net to facilitate a free, easily accessible digital literacy programme Kanarau Digital workshops, covering internet searching, email, video platforms, etc for those with little or no digital literacy. This would significant increase capacity in this area, with the potential to more than double current provision of free digital literacy programmes in the District. The programme focusses on building relationship and reducing fear associated with things like on-line safety • The Youth Development Facilitator facilitated a partnership between and Ara and Rangiora High School to ensure maintenance of Ara Community Skills Education.	Libraries, Senior Net, U3A, Rotary, Youth Council, Older Persons' Advisory Group, Rangiora High School
4.4.6: Mental Health and Suicide	17	• Established a local Mental Health Provider network to inform appropriate responses, delivered via Social Services Waimakariri, the Waimakariri Health Advisory Group and the WaiLife Suicide Prevention Steering Group. Feedback has been considerably favourable with respect to the value of this forum in providing support and collaborative thinking to identify and address issues affecting that sector. • Increased promotion of mental health and support agencies and resources • Facilitated a Suicide Prevention and Wellbeing 'tradie' breakfast, attended by over 100 highly engaged men and resulting in several referrals to Counselling. Planning is underway for further suicide prevention and wellbeing forums through rural and trades-based networks. • Supported a collaborative response to supporting Rangiora High School students and staff, following the recent tragic loss of several students and one staff member. • Facilitated pastoral care responses for affected staff and students at Rangiora High School, with 'care packages' developed by the Community Team and disseminated via school staff.	Rural Support Trust Oxford Community Trust Mike Greer Homes WaiLife Suicide Prevention Steering Group Social Services Waimakariri

4.4.7: Alcohol and Other Drugs	17	• Developed and disseminated an information resource detailing services and supports related to alcohol and drug harm. • Pat Buckley 'Drug proof your child' workshop held at all local high schools and via a community forum in August. – Total reach of 700-800 students and a cohort of local parents. • Established a parent support group for those impacted by their children's drug and alcohol abuse. • Developed a Drug and Alcohol Harm Waimakariri Steering Group • Drug and Alcohol forum held in March, with representation from 15 key agencies. • Developed the draft Waimakariri Community Action Plan on Alcohol and Drug Harm 2021, currently under consultation • Facilitated local delivery of Foetal Alcohol Spectrum Disorder training to over 90 representatives from across the health, social, education and community sectors, including caregivers and wider family impacted by the adverse effects of this disorder. Note: A full overview of activity related to drug and alcohol harm, including outcomes will be presented at the June meeting of the Community and Recreation Committee	Wellbeing North Canterbury, Salvation Army, Corrections, 24/7 Youth Work, City Mission, North Canterbury Community College (ComCol), He Waka Tapu, WDC Youth Development and Suicide Prevention Facilitators
4.4.8: Family Violence	17	• Business as usual planning, including provision of web-based education and support programmes. • Facilitated a 'Strangulation' workshop in August for over 60 local providers, including Police, Local Women's Refuges, Oranga Tamariki, Maori Health Providers, Child Psychologists. • Facilitated a 'Men who use Violence' professional development training day for those working in family violence and associated sectors - attended by 140 local providers from across the health, social, education and community sectors.	Violence Free North Canterbury Steering Group Members

		• White Ribbon Campaign delivered at local High Schools, with a focus on what represents a safe relationship Note: A full overview of Family Violence initiatives, including outcomes will be presented at the June meeting of the Community and Recreation Committee	
4.4.9: Funding	17, 18 and 19	• Provision 'Zoom' funding education and information workshops, with overall turnout of around 230 representatives from over 100 local agencies and community groups. • Worked with Social Services Waimakariri to facilitate a Collaboration Hui held in September, as a follow up to the COVID Recovery Forum. This engaged over 60 people from various local organisations in planning for collective development and funding of initiatives that will strengthen our local communities. • Supported several local organisations with the acquisition of funding for their operation, including Neighbourhood Support, Hope Trust, Satisfy Food Rescue, TimeBank Waimakariri and Wellbeing North Canterbury.	Rata Foundation, DIA, Philanthropy NZ, Ministry of Social Development
4.4.10: Support for Migrants	18 and 21	• Led a review of the Waimakariri Migrants Group strategy, structure and branding. This included a splitting off, with the establishment of a 'Meet Up' group to encourage and facilitate increased across cultural inclusion and connection. It also including the cementing of the stakeholder group which now meets quarterly, rather than monthly, to progress the more strategic aspects of this portfolio. • Rebranded the Migrants Group to 'GLOW' (Global Locals of Waimakariri) as more inclusive and less stigmatising description of the group's kaupapa. • Prepared and focus group-tested a survey of migrant sector agencies and local migrants to clearly ascertain local migrant issues and inform appropriate response. • Facilitated well-attended "Explore the Netherlands" cultural event, giving local residents an opportunity to immerse themselves in the music, food, dance, stories and recreational activities of another culture.	Office of Ethnic Communities Christchurch Multicultural Council Immigration NZ Ministry of Social Development Civil Defence Regional Migrants and Newcomers Group

		• Linked job-loss affected migrants into appropriate local supports and training opportunities. • Continued to support and promote local delivery of English Language classes Note: A full overview of GLOW initiatives, including outcomes will be presented at the August meeting of the Community and Recreation Committee	
4.4.10: Volunteering	18 and 19	• Facilitated the development of a six series suite of subsidised capacity and capability building workshops for local volunteer-involving organisations to increase capability. These will include funding, governance, strategic planning, marketing and promotion, finance and managing volunteers. Registrations are good, with the series beginning later this month. Strong and well supported local organisations translate into strong and well supported communities. • Supported funding and planning for a growing Timebank Waimakariri, including assistance with process. • Currently working on a series of activities for Volunteer Week, in June. These are aimed at encouraging volunteering and providing easily accessible means for people to get involved in volunteering. Volunteering is a great social connector and can often translate into employment opportunities.	Ministry of Social Development Volunteering North Canterbury
4.4.12: Access to Recreation	19	• No further activity beyond initial planning (alongside Greenspace) for a local Sport and Recreation Steering Group to encourage collaboration and mutual support between sport and recreation codes/clubs. This has been stalled as anecdotal evidence and feedback from key local recreation providers points to their not being a particularly urgent need for intervention at this point.	Council Community Team and Greenspace staff, relevant Sporting Codes, North Canterbury Sport and Recreation Trust
4.4.13: Support for local Youth	17, 18 and 19	• Completed recruitment for six new Youth Councillors • Supported the Youth in Emergency Services Cadet Program. • Supported a strengths based response to youth issues in Kaiapoi, in collaboration with Libraries, police, Greenspace and District Regeneration. • Led community engagement and collaboration on design for the Rangiora Skate Park redevelopment project.	WaiYouth and Youth Council, North Canterbury Youth Services Network (A network of representatives from agencies and community groups supporting local youth)

		• Continued to progress the Youth-friendly Community project, with preliminary engagement and research phases now complete • Currently partnering with 24/7 youth to develop a 'Parenting Teens' series, covering: Alcohol and the teenage brain o Pornography o Relationships o Cyber Safety and Bullying • February's Summer Jam in the Park attracted over 200 local youth and included: o Centre Stage Youth Talent Show (cancelled in 2020, but now in its seventh year) o Skate Jam o Outdoor Movie • The fourth iteration All Night Party in September was attended by 155, local youth, 155 young people who were transported between six different venues. Ice Skating, Mega Air trampolining, Clip 'n' Climb, Bowling, Timezone and Hoyts Cinemas. • Acquired $20K in Rata Foundation funding for a 2021/2022 series of events-based projects for local young people, developed and led by young people, with support from the Youth Development Facilitator. • Youth Education and Employment are being addressed via the North Canterbury Youth Futures group and planning for a Youth Employment Expo to be held in June. – The previous expo attracted an audience in the thousands, with 75 exhibitors. The scope for this year's event has been considerably broadened.	

EMPLOYMENT & EDUCATION
BEYOND SCHOOL

WAIYOUTH
SUMMER FESTIVAL

WANT TO WIN A FREE ALL NIGHT PARTY TICKET?!
SEND A VIDEO IN TO US, AND THE BEST VIDEO WILL WIN!

Men who use violence
$10

YOUTH ACTIVITIES
SURVEY

English Language Classes
For speakers of English as a second language
Improve your speaking and listening skills in a fun and friendly atmosphere.
Every Saturday, 10am-1pm
Rangiora Town Hall
1 May – 26 June 2021
To find out more or to register phone Julie Coughley, 027 403 8245 or email cloughju@hotmail.com

Explore the Netherlands!
Want to find out more about the Netherlands?

HAS YOUR EMPLOYMENT SITUATION BEEN AFFECTED BY COVID – 19?
Come along to one of our workshops for information, support and advice
Venues
Oxford Cancelled
Kaiapoi Workingmen's Club: Thursday 3rd September
Rangiora RSA: Thursday 17th September
All from 9am to 12.30pm
MORNING TEA PROVIDED
Find out more:

PREVENTION OF
ALCOHOL & DRUG HARM COMMUNITY FORUM

It's BBQ Time!
Neighbourhood Barbeque
Baker Park

IS YOUR ORGANISATION ON TRACK?

NORTH CANTERBURY COLLABORATION FORUM

TRADIE SUICIDE PREVENTION BREAKFAST
23RD MARCH 2021
7-8AM
GUEST SPEAKER
LANCE BURDETT
175 MAIN NORTH ROAD
stressed

4.4. The Management Team have reviewed this report.

5. COMMUNITY VIEWS

5.1. Groups and Organisations

In line with Community Development practice, a wide range of community stakeholders continue to be engaged in the Community Development function of the Waimakariri District Council Community Team, fostering a collaborative response to identified community issues.

5.2. Wider Community

Broad community engagement is an important part of the work of the Community Team. This ensures a community-led approach that is relevant to all with a stake in creating a safe, healthy, connected and resilient District**.**

6. IMPLICATIONS AND RISKS

6.1. Financial Implications

6.1.1. With significant development funding and sound governance and planning in place, Rata Foundation and Department of Internal Affairs have expressed interest in supporting the food security base, community hub and education centre, detailed in item 4.2.10 of this report.

6.1.2. It should be noted that these funds do not include provision for resourcing for facilitation of this, or other key projects associated with the social recovery of our District. While short term resourcing is in place to June 2022, this will need to be reviewed if we are to see appropriate utilisation of this significant funding.

6.2. Community Implications

The application of an evidence-based, community-led approach to this work ensures the development of sound, relevant initiatives that empower residents to plan a part in creating a safe, healthy, connected and resilient District**.**

6.3. Risk Management

We will need to ensure facilitation resourcing is in place for an adequate period to allow for the development of key recovery projects to a point where they can be handed over to the community for sustainable delivery. At this point, neither government nor philanthropic funders have indicated their intent to provide such funding, as this is seen as community development and part of social recovery, therefore the responsibility of Councils.

6.4. Health and Safety

Health and Safety considerations are included in planning.

7. CONTEXT

7.1. Policy

This matter is not a matter of significance in terms of the Council's Significance and Engagement Policy.

7.2. Legislation N/A

7.3. Community Outcomes

Community Development aligns with the following Council Community Outcomes:

- *There are wider ranging opportunities for people to contribute to the decision making by local, regional and national organisations that affects our District.*
- *People are friendly and caring, creating a strong sense of community in our district.*
- *People have wider ranging opportunities for learning and being informed.*
- *The community's cultures, arts and heritage are conserved and celebrated.*

7.4. Delegations

None

Tessa Sturley
COMMUNITY TEAM MANAGER

Food Secure North Canterbury Report 1st June - 31 January 2021

Contents

2 About Us
3 At a Glance
4 Satisfy Food Rescue Partner Report
6 Kaiapoi Food Forest Partner Report
8 Foodbanks Partner Report
9 FSNC Priorities 2021

10 Appendices
Financial Report
Terms of Reference
Food Rescue Data Sheet
Forum Invitation

About Us

From left to right:
Brent Cairns, Louise Griffiths, Ronel Stephens, Rachel Thornton, Phillipa Hunt, Stef Van Meer, Nicki Carter.

The Food Secure North Canterbury governance group was born out of the local food and budgeting forum.

For the last ten years locally in North Canterbury the foodbanks have been meeting to work collaboratively for the benefit of the district.

During the COVID event of 2020 this collaborative partnership was critical in taking care of the food needs of the most vulnerable in our community.

When the funding rounds were released for creating food secure communties this group supported by the Waimakariri District Council and Social Services Waimakariri applied knowing that the existing collaboration could extend and develop its work to a wider purpose for our community.

The governance group was then chosen strategically to look at food security in our region. Represented on the governance group is Satisfy Food Rescue, Kaiapoi Food Forest, Oxford Community Trust, Kaiapoi Community Support (representing the four local food banks), Waimakariri District Council and Social Services Waimakairi.

Each member of the group brings specific skills and experience that enhance the work of Food Secure North Canterbury.

As you will see throughout the report and attached documentation we have had a very busy first six months. From a governance perspective our focus has been initially to establish our systems and process to ensure sustainability.

Members of the governance group have been involved in local evaluation training and organising a recent community wide collaboration forum that Rata foundation funded. We are commited to establishing this work well and engaging multiple avenues to do so.

To that end we have developed terms of reference for the governance group, a strong financial process for partner organisations, and we are also in the process of logo/brand development.

A website is in development also that will work alongside the social and community sector to enable the “newly vulnerable” to access the help they need, whether that be food, counselling or employment assistance.

It has begun!
Nga Mihi

Numbers at a Glance

Rescued & Produced Food

49,112 kgs of food distributed

140,320 equivalent meals

3000 kgs of produced food

Education

Double the visitor numbers to the food forest

Double the education classes

Liaison with schools

Foodbanks

4 new freezer/chillers, generator

Over **800** food parcels delivered

43% of one foodbank's distribution was to households that hadnt requested assistance from them before July 2020

Governance Group

Vision, Mission

Terms of Reference

Reporting template

Financial process

Logo/brand development

Monthly governance meetings

Community wide forum

Larger Community Projects

Kaiapoi Community Hub Development

Website

Partner Organisations

Satisfy Food Rescue Partner Report

Role within FSNC: Satisfy Food Rescue is contributing towards a food secure community by re-directing surplus edible food from food retailers, growers and wholesalers to community organisations that are working with those in need.

Two members of our organisation (one staff and one trustee) are a part of the FSNC is in the governance group.

Actions currently planned:

Kaiapoi Community Hub - Continuing to work with Waimakariri District Council, funders and other stakeholders to realise the vision of a community hub in the Kaiapoi Red zone that will have among other things collaborative spaces and a dedicated purpose-built facility for Satisfy to operate out of.

Amberley Offshoot – Continue to work with Hurunui District Council and local Hurunui food banks to establish a collaborative space that Satisfy can operate an Offshoot out of so that we can better serve the people in the Hurunui.

Other FSNC initiatives – Supporting and promoting the work and plans of FSNC as a whole and also the work and plans of the member organisations.

Highlights/Achievements to date:

- We have rescued significantly more food than in the same period last year (21% increase in 2020 four-month period Sept to Dec compared to 2019)
- Hired a new staff member resulting in staff hours almost doubling per week (35 hrs/wk to 65 hrs/wk)
- Moved into new larger and more functional premises which means:
  it is a safer work space for our staff and volunteers
    - o We can modify the workspace to meet H&S and volunteers needs
    - o Allowed us to purchase equipment to enable all of the above:
    - o Pallet jack
    - o Scissor lift table
    - o Extendable and moveable conveyor table
    - o Shelving
- Purchased new walk in 3m2 outdoor freezer (combination of funding including MSD COVID Response Grant)
- Opening/blessing celebration for our new premises on 11th November. It was a wonderful evening attended by many of our volunteers, recipient organisation and other stakeholders.
- Increased connections and collaboration with other food rescue organisations e.g. Kairos and NZ Food Network
- Becoming a member of Aotearoa Food Rescue Alliance
- Being part of setting up Food Secure North Canterbury

Challenges:

The increased quantities of rescued food have resulted in a number of challenges:

- oMore employee hours required (to manage logistics of food distribution and storage)
- oMore volunteer hours required (to sort and distribute food)
- oMore chiller space required (our existing 3m x 2m outdoor walk-in chiller is often not large enough)
- oIncrease pressure on space for transporting food. We may need an additional vehicle soon.
- oThe new premises has also had some challenges:
- oIncreased expectations on volunteers especially in regards to cleaning
- oLarge truck manoeuvring for deliveries can be tricky since we do not have a turn-a-round area. We have had to arrange to pick up some deliveries from third party locations since some vehicles can't drop off at our location.

Key Story

As we started to share the Food Secure North Canterbury vision and opportunity the governance group was approached by the Oxford Lions Club. They had land and volunteers and were offering to plant potatoes for the upcoming Christmas rush to supply the local foodbanks and community groups, through Satisfy, with potatoes.

The Lions Club are also going to grow and harvest corn as well.
They approached Food Secure North Canterbury officially and the governance group agreed to its alignment with our purpose and so paid for fertiliser and seeds.

Neighbouring areas have heard about this and may intiate their Lions Clubs to do a similar thing.

Stef van Meer (manager Satisfy Food Rescue) is pictured here visiting the crop prior to harvest time. To date this project has provided our community with a whopping 540kg of potatoes!!!

Kaiapoi Food Forest Partner Report

Role within FSNC: Kaiapoi Food Forest is a member of the FSNC governance group.

Our Community Food Forest in Kaiapoi (Mahinga Kai), is a park that people come to picnic and play, but also to forage for food 24/7, ie. fruit, veggies, berries, herbs, citrus, medicinal plants (rongoa). We are actively contributing to a food secure community by providing food forest tours for schools and interested groups, holding events to increase the profile. There is a large focus on education. We teach people how to grow food sustainably, without pesticides or herbicides; along with propagation, edible weeds, mushroom growing, kumara growing - just to name a few things.

Actions Planned:

After COVID, we became aware that people were keen to grow their own food, but didn't know how, "whilst we are all eaters, we are not all producers." We need to change this paradigm.

We have developed a successful food security model by creating the food forest. We believe that using under utilised reserve land in towns and cities throughout New Zealand is a way of helping people to connect with their food and help them to feed their whanau.

One of the many courses we run is a Food Forest design course. By holding such courses throughout NZ we will be able to identify interested locals who will lead the creation of their own food forest. We will be then be able to help those kaitiakitanga with design, advocacy, mentoring and help with sourcing of trees and plants to help them get started, helping their own communities to be more food secure.

We are also in the process of planning a new bbq/shaded education space to enhance our classes and what we can offer; as well as toilet facilities.

Highlights to date:

- We won New Zealand Gardener of the Year Competition. We have been contacted by groups from Waikato, Chch, Amberley, Selwyn District and Lyttleton (Owen Wright Memorial), with the view of replicating food forests in their communities.
- We have almost doubled the number of educational programs with increased number of people attending.
- People are coming from a wider geographical area and the audience is getting younger. Selwyn District Councillor visited.
- Kaiapoi North School with our help are creating their own food forest, choosing edible plants that they like and able to be harvested when the students are not on holiday.
- Increased number of volunteers helping. Eg - We regularly have international students helping, thanks to Kaiapoi High School.
- Being part of the FSNC group is opening doors and enabling us to move forward with projects much more confidently and collaboratively. Shared skill, resource and experience is very valuable.

Challenges:

- We need to increase awareness of the food forest, as a successful component to food security.
- There is a growing number of people visiting the food forest, so ripe fruit is gone within a day or two. (In township of 11K residents, we could have 2-3 food forests, so long as there are people willing to guardian them)
- There is a rising number of people visiting to receive free surplus food.
- We need to have more people growing their own food, and mitigate the rising percentage of people living in rented accommodation, who do not see spending money on edible trees and plants as worthwhile.
- There needs to be a paradigm shift in the way we garden. Ie no dig, no sprays, growing food in layers, which is less labour intensive.

Looking forward:

Development of our new shaded bbq/education area is a key project within Food Secure North Canterbury. This is going to enable our education program to multiply and become even more effective and accessible.

Our primary focus is to grow food and show others how to do the same, it is not to rescue food. However, by having an onsite Fruit and Veg stand and contacts within food industry we do rescue a significant amount of food per year.

Visitor numbers have doubled over the last year. Kaiapoi North School are wanting us to help build their own food forest and we aim to have that replicated in other schools across the district in the future.

Food Banks Partner Report

Role within FSNC: We have structured the governance group so that all four major foodbanks are represented by one individual. All four are working alongside FSNC and Council to come up with ways to map the areas of deprivation through reporting and a shared database system.

The foodbanks all work to make the district more food secure through providing food parcels where required alongside other supports and, in some cases, opportunities for indivuduals to empower themselves toward a more positive future. eg. work experienc, community gardens, op shops etc.

Actions Planned:

- Creating a shared database alongside Council and other projects such as the website within FSNC.
- Community-led food gathering opportunities
- Building volunteer capacity within foodbanks and Satisfy Food Rescue to process the enor mous amount of harvest fruit and vegetables that become available. This will enable them to be distributed frozen or preserved over winter.
- Toot for Tucker - our communities pre-Christmas annual food drive. Developing this collaborative project between foodbanks, businesses and the community.

Highlights to date:

This Christmas our local Lions undertook to distribute our Christmas food parcels and presents to families in the community. We were very fortunate to also receive donated boxes of food from Satisfy Food Rescue to give them, alongside $50 supermarket vouchers from MSD.
The local Lions have also donated Christmas cakes and potatoes to our families.

Working with our food rescue partner Satisfy Food Rescue, we provide basic food parcels by raising financial donations and food donations from our community. Satisfy Food Rescue's contribution of fresh produce, dairy and meat enables us to provide a much healthier range of food to our clients at no extra cost to us.

Challenges:

Communication with our community during lockdown was a challenge.
Fresh food for families will always need to be purchased.

Key Stories

We often have older people bringing in produce from their own garden or vegetable plants they want to donate to us. We do not always have room to store perishables and don't give our clients plants. It has been great to be able to direct these generous people to our local food forest instead. There they can donate their produce quickly to people who benefit and there is a way to plant their donations of seedlings where they will be grown and harvested by the community.

We have been supporting one family since COVID and her loss of job.
We have worked with her to complete residency and support her with employment opportunities.

Directly after COVID we knew we had to find a way to reach out and get information to people who would not necessarily come to us. The newly unemployed were likely to be people who were not used to asking for help, so we came up with an idea to put a sticker on the back of hot chocolate and give it out at the local area school. It was a great success and we had a number of enquiries along with a positive response from people.

Food Secure North Canterbury Priorities 2021

FSNC Values session
Logo/Brand completed
FSNC Communications Strategy
FSNC Media Policy
Food Secure Forum (Community Wide)
Food Secure North Canterbury two year plan for MSD
Widening of stakeholders
Shared database and mapping project
Next Steps website
Capacity building across the district
Collaboration between partners
Kaiapoi Community Hub requirements
Education/shade bbq area for Kaiapoi Food Forest
Strategic stakeholder development (other funders)
Volunteer capacity for stakeholders

"Receiving the food is an amazing opportunity to help our 'in need' families. To see the tears in the eyes of young Mums as we deliver the food says it all. They are so grateful just as we are. It is so nice to think we are part of making use of food that may otherwise be dumped but is still in good usable condition and is also making life far easier for our young families."
- Rachel's House

Appendices

Financial Report
Terms of Reference
Food Rescue Data Sheet
Forum Invitation

Food Secure North Canterbury (Satisfy Food Rescue) Collaboration Financial Report

Grant Item	Column1	August	September	October	November	December	January	Column2	Total	Column3	Total4	Column5	Budget
		2020	2020	2020	2020	2020	2020						
Grant		125000	0	0	0	0	0		125000		250000		250000
Wages		0	0	0	0	0	0		0		51120		51120
Food		0	900	0	1120	6402.76	0		8422.76		40000		40000
Food Storage		5805	22414	5739	0	0	0		33958		36000		36000
		0							0		0		0
Utilities		0	0	3577.74	17030.55	2141.01	0	0	22749.3		27000		30000
CRM		0	0	0	0	0	0	0	0		720		720
Rent		0	4538.2	0	2269.1	0	0	0	6807.3		27000		27000
									0		0		0
Development		0	0	0	0	0	0	0	0		20000		90000
Education		0	0	0	0	0	0	0	0		20000		20000
		0							0		0		0
Social Marketing		0	0	0	0	0	0	0	0		10000		10000
Data Collection.		0	0	0	0	0	0	0	0		0		0
		0							0		0		0
Other Funders		0	0	0	0	0	0	0	0		-52000		-52000
									0		0		0
									0		0		0
Total		5805	27852.2	9316.74	20419.65	8543.77	0	0	71937.36		179840		252840
Balance									53062.64				

Terms of Reference

Food Secure North Canterbury Governance Group

Vision: Nourished & empowered communities.

Mission: To pioneer change that enables our community to be food secure through sustainability, innovation, and collaboration

Nature of the Group: The FSNC governance group (governance group) is committed to creating a Food Secure North Canterbury through:

We work together by:

- Being open about uncertainties, whilst building hope
- Inquiring deeply about each other's ideas and organisations
- Noticing our own assumptions and being willing to move
- Being brave and speaking our truth – respectful
- Being possibility focussed – daring to dream
- Facing our fears and being open to leaving stuff at the door – 1 + 1 = 3.

Membership of the Governance Group:
Membership is made up of: Social Services Waimakariri, Kaiapoi Food Forest, Oxford Community Trust, Kaiapoi Community Support, Satisfy Food Rescue, Waimakariri District Council, Hurunui District Council.

Members of the collaborative will appoint representatives to this governance group.

These Terms of Reference will be signed off by the organisations represented in the governance group.

We will regularly strategically consider how our Governance Group is representative and identity who might need to be additionally invited.

ADDITIONAL if needed: We have the right to co-opt to additional members or advisors from outside the member organisations as required.

Roles and Responsibilities of the Governance Group members:

Each member will be able to speak and make decisions on behalf of their organisation, or defer to their organisation for a decision when appropriate.

Each member will be able to interact with the coordinator of the (name) Collective outside of governance meetings, except around direct employment issues.

Role of Chairperson:

- Will be appointed by the governance group/ may be rotating.
- A Chair and Deputy Chair may be appointed if required.

Function of the Chair:

- To provide leadership and ensure the Governance Group functions properly.
- To liaise with the backbone organisation to ensure a Memorandum of Understanding is in place for finances and employment

Accountability of the Governance Group:

- Vision, goals and governance structure – To be reviewed after 24 months.
  There is an intention that this group is working towards a time when this work will be completed – that this community will be food secure, therefore there is an expectation that in the future this group will no longer have a purpose.
- The governance group is accountable for ensuring ongoing funding provision is made for its agreed work plan. The fund holder, along with members of the governance group, will ensure the necessary accountabilities are carried out for each funding agency.

Financials:

- The governance group will appoint and appropriate fund holder for each grant applied too.
- Financial audit or review will happen through the fund holder.
- Financial process will be developed between the fund holder and the governance group
- This process will be followed and reviewed alongside the budget at each meeting.
- Budget to be approved annually.
- Expenditure is to be presented to the governance group at least four times a year, preferably a monthly report.
- Any amounts needing to be reimbursed will be recorded on receipts and given to the accounts officer of the fund holder and follow the fund holder financial processes for approval.

Responsibilities of the Governance Group:

- Set strategic priorities and work programme for the group
- Provide oversight of the agreed work plan for the FSNC collaboration
- To develop effective working relationships with key organisations and stakeholders
- Support the collaboration to deliver their work plan through support from our member agencies
- Identify and make recommendations on funding requirements associated with the group
- To develop effective communications with stakeholders and wider network of the collaboration

Quorum requirements and meeting format:

- 5 members present represents a quorum
- A minimum of six meetings per year.
- Some in person and some remotely via zoom or other appropriate technology as agreed by the governance group.
- Meeting procedure is informal with a focus on action and information.

- Where ever possible decisions to be made by general consensus.
- If general consensus cannot be reached, then any decisions should be deferred to next meeting. All member agencies to be advised of intention to vote on the issue at the next bi-monthly meeting. One vote per agency/organisation.

Agenda: Agenda items are sought two weeks preceding each meeting. The agenda is circulated one week prior to the meeting including all briefing/background papers to be discussed. If a decision is required a recommendation will be clearly stated at the end of the paper.

Reporting: Each meeting will have a report presented by one of the member organisations. This will be on a rotating basis to ensure the story of FSNC is told effectively.

Minutes: Minutes are to be circulated to members within ten working days of the meeting via email for confirmation. They will include a list of key decision made and actions required.

Conflicts of Interest Members are expected to declare conflicts of interest should they arise. A 'Register of Conflicts of Interest' will be maintained. Any conflicts will be dealt with on a case by-case basis.

Ratified by:

Food Secure North Canterbury
Governance Group Membership Agreement

_____
(Name of organisation member)

Agrees to be an member of FSNC Governance Group

Our organisation agrees:

- **To support the *Food Secure North Canterbury Governance Group* vision, mission and purpose**.
- **To adhere to all elements of the agreed Terms of Reference and take up responsibilities as required.**
- **To work in a manner that is supportive of the other organisation's in the governance group.**
- **To adhere to the code of conduct as below.**
- **Nominate a representative that can speak on our behalf and follow the code of conduct.**
- **That the FSNC Collective goal is an integral part of our ongoing strategic way forward including.**
- **To provide strategic guidance, vision, and oversight for the governance group.**

Member behaviour/ Code of conduct expectations

Each member will:

- Participate actively and to the best of their ability in the FSNC
- Support and promote the FSNC goals and projects, positively in the wider community.
- Act honestly and in good faith at all times.
- Being open about uncertainties, whilst building hope
- Inquiring deeply about each other's ideas and organisations
- Notice our own assumptions and being willing to move
- Being brave and speaking our truth – respectful
- Being possibility focussed – daring to dream
- Declare all interest that could result in a conflict between personal, business and FSNC priorities
- Focus on ideas and solutions.
- Listen with respect and curiosity, with only one conversation at the table at any time.
- Behave professionally and respect confidentiality.
- Be kind.

Signature: _____ Date: _____

CEO / Organisational leadership: _____

Satisfy Food Rescue - Data Summary 2020

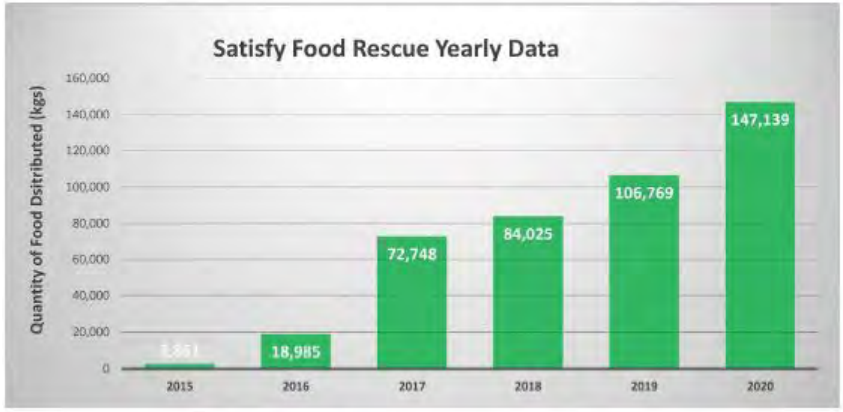

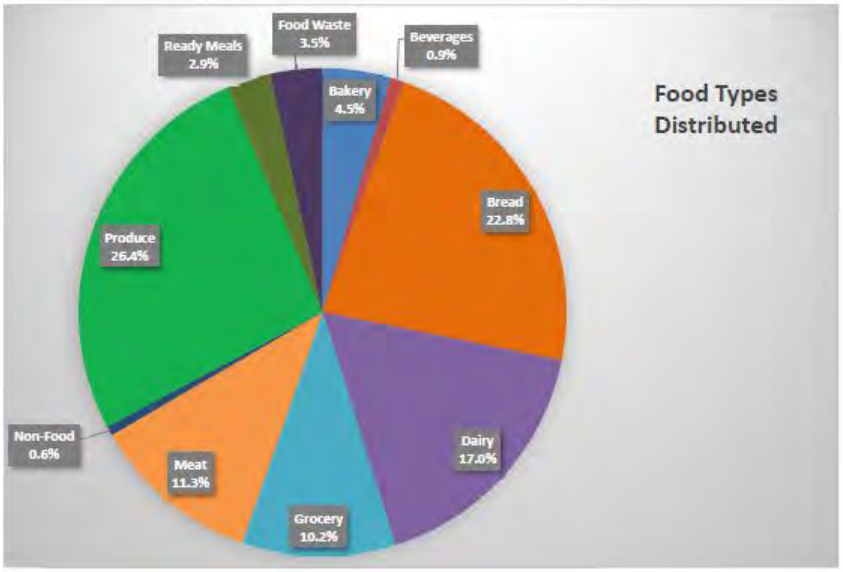

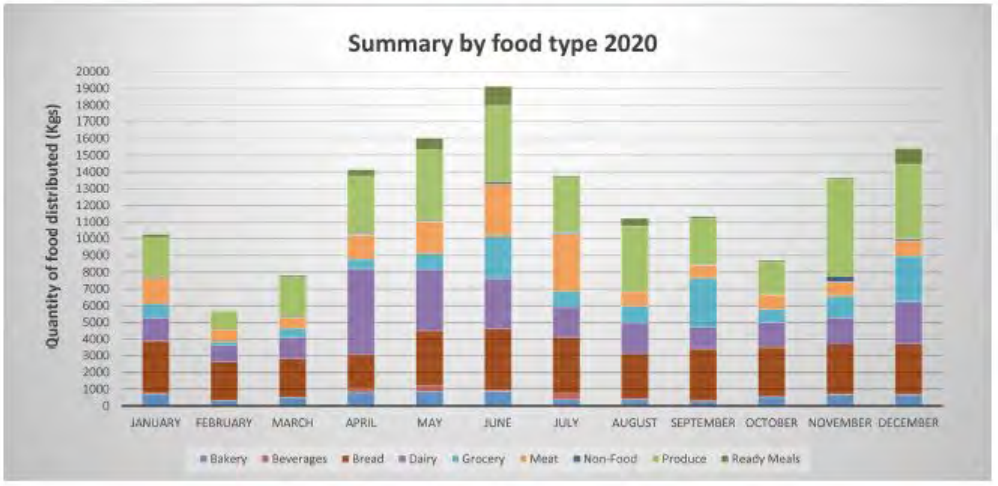

FOOD SECURE NORTH CANTERBURY FORUM HELP US PLAN A FOOD SECURE FUTURE

12NOON - 3PM
25TH FEBRUARY 2021
WOODEND COMMUNITY CENTRE

RSVP FACILITATOR@SSWAIMAK.NZ

FSNC
Food Secure
North Canterbury

Food Secure North Canterbury

2 YEAR PLAN

"Nourished and Empowered Communities"

TABLE OF CONTENTS

	Page
Executive Summary	3
Key Priorities	4
Increase food access	5 - 7
Education & skill sharing	8 -10
Raise awareness & involve/engage communities	11-13
Policy & planning	14 -16
Capacity & capability through collaboration	17-19
In Summary	20 - 21

EXECUTIVE SUMMARY

The Food Secure North Canterbury governance group was born out of the local food and budgeting forum.

For the last ten years in North Canterbury the foodbanks have been meeting to work collaboratively for the benefit of the district.

During the COVID event of 2020 this collaborative partnership was critical in taking care of the food needs of the most vulnerable in our community.

When the funding rounds were released for creating food secure communities, this group supported by the Waimakariri District Council and Social Services Waimakariri, applied for those funds knowing that the existing collaboration could extend and develop its work to a wider purpose for our community.

The governance group was then chosen strategically to look at food security in our region. Represented on the governance group is Satisfy Food Rescue, Kaiapoi Food Forest, Kaiapoi Community Garden, Oxford Community Trust, Kaiapoi Community Support (representing the four local food banks), Waimakariri District Council, Hurunui District Council, and Social Services Waimakariri.

Each member of the group brings specific skills and experience that enhance the work of Food Secure North Canterbury.

We have had a very busy first six months. From a governance perspective our initial focus has been to establish our systems and process to ensure sustainability.

Our Mission

"To pioneer change that enables our communities to be food secure through education, innovation and collaboration."

Members of the governance group have been involved in local evaluation training and organising a recent community wide collaboration forum, funded by Rata foundation. We are committed to establishing this work and engaging multiple avenues to do so.

To that end, we have developed Terms of Reference for the governance group, a strong financial process for partner organisations and we are also in the process of logo/brand development.

This group together determined our five strategic priorities and then we have built on them through a number of engagement opportunities for our community.

We recently held our Food Secure Forum which engaged the wider community and gleaned a huge amount of ideas that we have subsequently incorporated into this plan.

Key Priorities

Increase food access

Education and skill sharing

Raise awareness and involve/engage communities

Policy and planning

Capacity and capability through collaboration

Increase food access

Strategic Priorities

1. Increased community food spaces
2. Enabling community participation
3. Creative opportunities

Increased community food spaces

Goal	Action	Timeframe
Accessible free fresh food in every neighbourhood	Development of more food forests, community gardens.	2 years
Community Gardens at 3 levels:	1. At home growing, supported by voluntary know how showing how to do and staying in touch 2. Establishes local community sized gardens. Work done by a number of people rostered on but overseen by one person who organises plantings, harvesting and weeding etc 3. Commercial size allotments, where produce is planted and harvested in large quantities, different skill set needed	Implementation 1 year Establishment 2 years

Enabling community participation

Goal	Action	Timeframe
Multiple community hubs which give people access to skill sharing and food that create social enterprise opportunities.	Establishment of the Kaiapoi Community Hub in a manner that makes the model replicable	2 years
Land / Lifestyle block owners donating land for use for growing food e.g. cash crops or fruit trees in planters and sharing resources. Note: see appendixes for what is already happening.	Map and engage various groups in this space and develop a specific process for them to use Eg. Reward program/membership group/database	1 year
Food Truck – to take food to people who do not want to use a food bank	Scope the need and plan the project. Then acquire funding. (this dovetails into the mobile food kitchen in our education section)	1 year

Creative opportunities

Goal	Action	Timeframe
Buy one – Give one – My food basket – delivered. Promotion / Fundraiser	Research this as an opportunity in how it can be developed through local producers.	2 years
Meat – approach hunting groups, butcheries, abattoirs to collaborate a meat/protein source	Map and research potential collaborators and develop processes.	1 year
Special hunting/ fishing days for the community food supply	Work with local groups to design a "community fishing day"	1 year
Pet lamb donations – give an urban family the chance to raise a lamb and then process it for food	Map possible collaborators/ farmers groups and design process	1 year

Education and skill sharing

Strategic Priorities

1. Growing food
2. Preparing food
3. Alternative Opportunities in education

Growing food

Goal	Action	Timeframe
Our community is fully educated and aware of how to grow their own food.	Development of an action plan alongside key partners. - Community gardens - Food forests - Gardens in schools - Planter box project	1 year
Educate food producers / brands about food waste and how they can re-direct food waste	Develop an education program with stakeholders of our food rescue partners	1 year
Well-resourced program	Infrastructure (buildings, shaded education areas) is purchased/developed to support this	2 year

Preparing food

Goal	Action	Timeframe
Our community is fully educated and aware of how to prepare food.	Development of an action plan alongside key partners. - Educators- classes on how to grow, how to cook with, how to preserve or freeze - Garden to table - List of local halls that could be used for cooking, ham making, education classes. - Skill-sharing	2 year
Well- resourced program	Infrastructure (buildings, facilities) Mobile kitchen facility to visit schools etc	2 year

Alternative Opportunities in education

Goal	Action	Timeframe
Introduce alternative garden options	Development of workshops e.g. hydroponics, aquaponics, permaculture, companion planning those people in rentals – mobile gardens/orchards	1 year
NZQA accredited adult education	- Research courses currently available - Engage expertise to help us design courses appropriate for our community: o At community hub or food forest o At community gardens for their volunteers	2 year

Raise awareness and involve/engage communities

Strategic Priorities

1. Develop marketing plan
2. Volunteer Engagement
3. Visible Presence

Develop a marketing plan

Goal	Action	Timeframe
FSNC is a well-known and trusted brand in our community	- Develop a solid marketing plan - Brand development - PR strategy and controlled engagement	1 year
FSNC uses innovative technology and is accessible to all in our community	- Website developed - FSNC APP designed to be used for multiple purposes and build the awareness in the community as well as empower people in all aspects of FSNC. (education, mentoring, recipes, food waste tips)	1 year

Volunteer Engagement

Goal	Action	Timeframe
Large volunteer base that invests FSNC	Strong volunteer management plan and policies - Engage a strategic coordinator - setting up groups of volunteers in each area, so they become a central that person who can be contacted for different areas. - Set up a roster of people to collect, distribute and process food - Volunteer Tree – develop this so that we have a network of volunteers to glean food that would otherwise go to waste	Current – 2 year
Capacity for skill-sharing volunteer opportunities	Invest resource wisely in infrastructure and facilities such as: - Community hubs to facilitate / locate classes, networking, skill sharing	Current - 2 year
Empowerment of the community and its ideas	Development of a tool/resource that enables the community to offer their skill-set or give of their time to educate others. - Grey Power – 'grow and gift' - Home gardeners – making the most of harvest	Current – 2 year

Visible Presence

Goal	Action	Timeframe
FSNC is wide-reaching and becomes a household name	Strong communications strategy developed. - Regular public updates - Regular media opportunities - Mainstream media engaged in our story	1 year
FSNC is easy to find	Development of the APP Multiple Facebook pages - Foraging, seed swapping, etc	1 year
Regular community events	Develop a calendar based around food and its production. - Community cook up / picnic day showcasing available produce – local chef / celebrity - Coffee mornings across the district based around an aspect of FSNC.	Current - 2 years

Grant to help food security

by Jackie Watson

Cameron Crawley and Michelle

NEWS AND

Focus turns to food

Exciting times ahead for Food Secure

Policy/ Planning

Strategic Priorities

1. Local Authority engagement
2. Stakeholder engagement
3. Mapping Project

Local authority engagement

Goal	Action	Timeframe
Policy makers and planners in local government considering food security in relevant decision making. Eg . New developments must include food forest or community gardens.	Develop a local government stakeholder plan. Elected member buy-in - District plan and relevant team involvement - Link to the council sustainability strategy - Plant fruit trees instead of non-edibles	1 year
Local government policy adapted to reward rate-payers engaged in food security	Identify and present ideas that could be adopted into council policy - Rates rebate to homes who plant fruit trees / edible gardens on verges etc	2 years
GST Free Fruit and Vegetables	Gather evidence and report strategically to be able to inform and support a proposal for GST free fruit and vegetables	2 years

Stakeholder engagement

Goal	Action	Timeframe
To have a wide range of stakeholders engaged in FSNC	Develop a thorough stakeholder engagement plan Build on existing stakeholder relationships	1 year
Stakeholders driving projects and engaging the story of FSNC	Gather and report stakeholder experience and stories	Whole project

Mapping Project

Goal	Action	Timeframe
FSNC is an informed and well-resourced project	- Mapping of broader stakeholders - Mapping of community resources - Mapping of area co-ordinators - Mapping of areas and streets of deprivation - Map what is needed throughout the year for food bank stock – 12 month plan this will help service organisations to know what and how much to grow	1 year 1 year 1 year Whole project

Capacity and capability through collaboration

Strategic Priorities

1. Funding Strategy
2. Collaborative Networks
3. Capacity Building

Funding Strategy

Goal	Action	Timeframe
FSNC is a well-funded and sustainable project	Develop a robust funding strategy that includes: - Corporate donor documentation - Multi-layered funding for specific projects	1 year
FSNC can support partners with funding and revenue generating opportunities	Regular meetings with stakeholder groups on projects and the funding required	Whole project

Collaborative Networks

Goal	Action	Timeframe
Positive and engaged experiences felt by all collaborative partners	- Regular forums with our stakeholders to keep them informed and hear directly their views, ideas and experience - Clear documentation and reporting of this process	Whole project
Broad across sector collaboration ie. Business, community	Intentional project development designed through discussion with the business community	1 year
Two established and successful operating collaborative community hubs	- FSNC is already working extensively alongside council and other groups on the Kaiapoi Community Hub - Action is to document this process to establish a second community hub in the district	Current – 2 years

Capacity Building

Goal	Action	Timeframe
All stakeholders and partner organisations are sustainable and well-resourced	Provide training and support opportunities to the wider FSNC community as need identified	Whole project
Capacity building opportunities at an individual level.	Develop projects that identify strengths and skills that can be replicated in the community - Eg. Connecting older experienced gardeners with younger/novice gardeners who can help share growing productive resources like e.g. garden patches	Current – 2 years

100

IN SUMMARY

The forum was a wonderful opportunity to bring more collaborative partners and individuals from our community into the Food Secure project and engage with them to build a plan for North Canterbury. Already we can see many of our projects starting to take shape. It is all leading to an exciting future for our district.

Testimonial

"To see so many community organisations come together at the Food Secure Forum was really inspiring. There were so many fabulous ideas that came from a group of engaged people looking to work together to create a food secure future for our North Canterbury Community"

FSNC
Food Secure
North Canterbury

WAIMAKARIRI DISTRICT COUNCIL

REPORT FOR INFORMATION

FILE NO and TRIM NO:	GOV-01-04 / AQU-02-09 / 210302035494
REPORT TO:	Community and Recreation Committee
DATE OF MEETING:	23 March 2021
FROM:	Matthew Greenwood, Aquatic Facilities Manager
SUBJECT:	Aquatic Facilities Update
SIGNED BY: **(for Reports to Council, Committees or Boards)**	Department Manager / Acting Chief Executive

1. SUMMARY

1.1 This report is to provide the Community and Recreation Committee with a summary of the Aquatic Facilities year to date progress against the units most significant Key Performance Indicators. It includes a summary of Aquatic Facilities Attendance, Water Treatment results and a budget update for the year to January 2020.

1.2 This report examines our Levels of Service identifying impacts from major events such as Covid and lower use times around Christmas/New Years with an eye for meeting community need while balancing efficiency of operation.

1.3 Further, this report updates on the impacts to our Annual Poolsafe accreditation process and how the industry is working to address these limitations

Attachments:

N/A

2. RECOMMENDATION

THAT the Community and Recreation Committee:

(a) **Receives** report No. 210302035494.

(b) **Notes** Aquatic Facilities progress against its key performance indicators including Facility Attendance, Financial results and Water Quality.

(c) **Notes** Covid 19 level changes continue to have an impact on operation and the steps taken by staff to keep the community safe while ensuring minimal disruption to activities.

(d) **Notes** the investigation into Levels of Service will ensure community need is balanced with efficient operation.

(e) **Notes** Poolsafe assessment has been delayed to mid-March due to Covid restrictions.

(f) **Circulates** the report to the Boards for their information.

3. BACKGROUND

3.1 The Waimakariri District Council's Aquatic Facilities team deliver strong aquatic programmes and enjoyable recreation opportunities for the ongoing wellbeing of our community and visitors. We do so from four sites, two indoor year round facilities and two seasonal summer pools which operate over the summer period, from October to April.

3.2 The Aquatic Facilities team work closely with partner organisations, clubs, trusts and interest groups to support water safety programming, grow and develop swimming and Aquatic exercise initiatives and work with the Council to ensure our facilities are inclusive places, accessible to all members of the community.

3.3 The Council and Aquatic Facilities team continue to comply with all guidance from the Ministry of Health relating to the ongoing Covid situation. Most recently, this has involved a number of short notice level changes. As in previous iterations, this comes with some restrictions to ensure compliance with MoH guidance. Physical distancing, contact tracing and additional cleaning procedures are all a given. Additionally we are capping the numbers of customers during lane swimming and Aquarobics classes to ensure physical distance requirements are maintained. A decision to move our region to level 3 would require the closing of facilities in line with MoH guidance.

3.4 Traditionally Aquatics have operated every day except for Christmas with other Council services closing for a period or specific low use days. In line with the critical look at our operation by the District Aquatics Strategy, staff propose further investigation into the viability of a number of options in what can be a relatively low use time.

3.5 The Waimakariri District Council has been part of the Poolsafe programme since its early days as, in lieu of other legislation; it offers an independent assessment against key operating criteria. Further, being involved in this programme offers the opportunity to both share industry best practice examples and be involved in the process of developing new national standards.

4. ISSUES AND OPTIONS

4.1. Aquatic Facilities Attendance

The following table provides a summary of the Aquatic Facilities attendances for the 20/21 year and a comparison with the previous year.
Recreation – Incorporates all casual swim types; adult, child, family, lane and leisure swims
Prepaid – This includes redemption of all concession and membership card types.
Programmes – Learn to Swim, Aquarobics and Schools programmes.

Attendance type	Kaiapoi Aquatic Centre			Dudley Park Aquatic Centre			Oxford Community Pool		
	Feb-21	Jan-21	Feb-20	Feb-21	Jan-21	Feb-20	Feb-21	Jan-21	Feb-20
Programmes	2684	269	4238	4501	1362	6824	2881	137	4596
Recreation	1155	557	2265	6725	12152	7041	731	1530	396
Pre-Paid	685	74	1299	2814	3465	2997	225	293	274
Total	**4524**	**900**	**7802**	**14040**	**16979**	**16862**	**3837**	**1960**	**5266**

In the table above, you can see the end of school holidays and the beginning of the school term period. This is shown by the decrease in Recreation swims and increase in Programmes attendances.

It is notable the figures in this period are still skewed by the Programmed Maintenance Closure at Kaiapoi Aquatic Centre, which started in January running through in to early February. This has the effect of making Kaiapoi's total for January significantly lower than

usual and inflating Dudley's January figures with some swimmers traveling up the road for their regular swim.

The ongoing effects of Covid restrictions can be seen above, especially the two most recent level changes and the effect this has had when comparing year on year figures. These show decreased attendance across the board except for Oxford recreation with this site being hugely weather dependent.

4.2. **Aquatic Facilities Water Quality Update**

Water quality at the Aquatic Facilities is measured both internally throughout the day by staff, and externally through monthly microbiological tests conducted by an independent lab. The table below indicates the achievement of the required PoolSafe and New Zealand water quality standards as measured by facility and month.

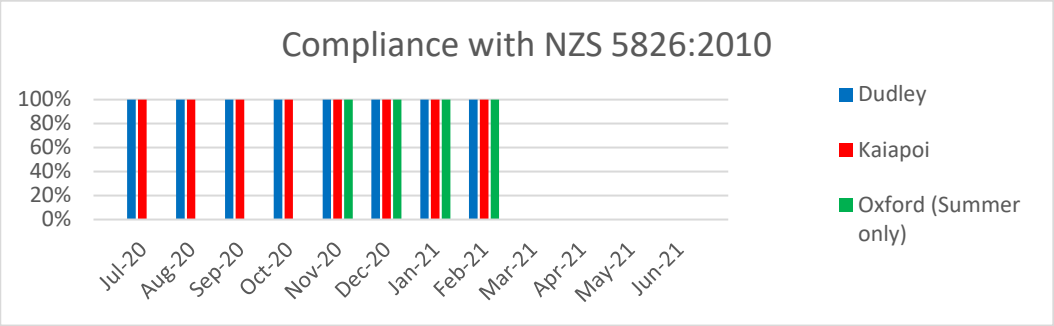

All testing at the Aquatic Facilities has met or exceeded New Zealand and PoolSafe standards for the 2020/21 year to date.

As noted by the CDHB and World Health Organisation there is no evidence that Covid is waterborne or can spread through the use of pools. Our facilities utilise Sodium Hypochlorite disinfection and tertiary Ultra Violet treatment systems, which have both proven effective disinfectants.

4.3. **Aquatics Covid level 2 restrictions**

Following the move back in to Level two we have again implemented our Covid protocols. As detailed in previous reports (Aquatics October 2020 update no.200925128402) we have worked with the CDHB to refine our operation to ensure we properly manage the safety of our customers and staff while still being able to offer core activities and services.

The importance of continuing to offer services where safe to do so, can not be understated with the communities mental health and wellbeing a major ongoing concern as the impacts of Covid drag on. Further, managing a dangerous environment and the mitigation of risk to customers is something the Aquatics team prides itself on.

Following are the steps taken by the Aquatics team to keep customers and staff safe during this dynamic and challenging time.

4.3.1. Signage and messaging to customers that if they are sick or unwell to please remain at home.

4.3.2. Strict physical distancing requirements observed while lining up at reception and elsewhere within the facilities.

4.3.3. Contact tracing requirements are met through our point of sale software which tracks concession card use and programme attendance, additional casual customer tracking and rosters tracking staff assignments.

4.3.4. Updated guidance from MoH states that in the operation of public facilities such as pools “there is no limit on how many people may be inside a public facility so long as they are able to maintain 1m physical distance.” During normal operation managing the movements and distancing of customers has been relatively simple however this gets more difficult at peak times around our learn to swim programme. To enable efficient yet safe use of our facilities at level 2 our focus has shifted to minimising the number of additional people within the facility and superfluous activities at peak times. Customers now only arrive 5 minutes prior to their class starting and leave once the class ends. Younger children may have one parent present to supervise however we have requested that parents of older children ideally wait in the car. While there was some initial resistance to the changes parents and children were quick to adapt and this has enabled our programme to largely continue without the need to pause any classes to restrict numbers.

4.3.5. We have requested that where possible customers plan to arrive and leave in togs. This minimises high touch areas like changing rooms however as you can imagine this has been difficult for some customers to manage. To this end we still offer some changing spaces in the family change areas which we frequently clean.

4.3.6. Each lane will be limited to 4 lane swimmers max. Customers have been spread evenly where possible or grouped by speed as numbers dictate. Recreational swimming is still available at select times, with customers able to swim with other members of their bubble in separate laned off areas.

4.3.7. Aquarobics session times will remain the same with class numbers capped to best manage the pool space and resulting needs for changing space afterwards.

4.3.8. Finally equipment such as Aqua belts, kick board and the water wheelchair have been moved off poolside to a storage area where they are still available for use but enabling staff to ensure they are sanitized after each use.

This approach has ensured that services have largely been able to continue with only some minor restrictions. Over all customers have been understanding of our approach as it enables them to continue to enjoy the facilities in a safe manner.

4.4. **Investigation into Christmas holiday Levels of Service**

Aquatics staff are looking into the viability of services over the Christmas New Year holiday period. The days on which the holidays are observed traditionally see lower use and due to holidays act/employment legislation it is also when we incur additional cost in one of our largest expenses, staffing.

While the Facilities have traditionally only closed for Christmas day, it is notable that all other Council services are closed during this period with a mixed Industry response also. Following on from the development of our Aquatics Strategy, it is important that staff explore our services and offerings to ensure that we run an efficient operation balanced by community demand.

Staff are beginning the process of engaging with the community over these changes by identifying key users through our point of sale, concession tracking system initially.

A range of options are being explored including no change, shorter hours, closing on selected days, or closing for a period. Once staff have the full picture of risks and benefits for each of these options we will present our recommendation to this Committee.

4.5. **Update to Poolsafe accreditation process following Covid interruptions**

While it is not currently a legislative requirement, Poolsafe accreditation is recognised nationally as the industry best practice standard for the operation of public facilities.

The process was developed by Recreation Aotearoa, formerly the New Zealand Recreation Association, in 2006 following a coronial inquiry into a drowning event in the North Island. Facilities are assessed against the standard set by an advisory group made up of members from across the industry. The assessment consists of a report sent to assessors prior then an onsite visit and interviews with staff. It covers all areas of facility operation from staff qualifications, ongoing training, hazard resolution, accident reporting, water treatment, to facility policy and procedures.

The assessors, who are industry professionals from across the sector, are sent out to facilities around February each year as this ensures they are able to capture the summer pools in operation also. Unfortunately, the ongoing changes in Covid levels required the postponement of these assessments.

To keep the process moving, Recreation Aotearoa have requested additional pre-visit reporting to assessors so that they are able to best maximise their time on-site, when visits are once again able to go ahead. Revised dates suggest the audit will occur in mid to late March depending on Covid level movements, with reporting and accreditation completed by late April.

4.6. The Management Team have reviewed this report and support the recommendations.

5. COMMUNITY VIEWS

5.1. **Groups and Organisations**

5.1.1. The ongoing situation with Covid 19 continues to impact both our operation and that of groups and clubs within the District. Following the relatively short notice application of Level 2 restrictions Aquatics staff reached out to schools who were participating in both the Schools Learn to Swim programme and facility hires for School Swimming Sports events. We have a number of options to mitigate risk and ensure ongoing compliance with MoH restrictions however schools must likewise assess their risk profile and we continue to work to find mutually beneficial and complaint solutions.

5.2. **Wider Community**

5.2.1. Covid 19 continues to have both short and long-term effects on our operation with impacts from restrictions relating to distancing and cleanliness in the short term, as detailed above. In the longer term, larger economic concerns are still becoming apparent with some families having less disposable income meaning they must prioritise their spending.

6. IMPLICATIONS AND RISKS

6.1. **Financial Implications**

The following table summarises the Aquatic Facilities operational financial position in the 2020/21 year as at January 2021.

Aquatic Facilities Budget Summary	YTD Actual $'000	YTD Budget $'000	Variance $'000
Operational Income	729	754	(25)
Rates Funding	1,993	1,987	6
Total Income	**2,723**	**2,742**	**(19)**
Operation Expenses	1,806	1,814	7
Maintenance	146	152	6
Overheads	394	397	3
Internal Interest	175	171	(4)
Depreciation	301	319	18
Total Expenditure	**2,822**	**2,852**	**31**
Total Surplus (deficit)	**(99)**	**(110)**	**12**

6.1.1. The uncertainty surrounding Covid continues to impact the business as public attitudes around social and group activities changes. The impact of this is clearly shown in the reduced Operational Income result. Across the year to date figures we see decreased take in Learn to Swim, Swimwear sales, Aquarobics and all Family admission types. However in this current month we have seen some of those areas rally, most notably family and recreation income swim types mostly due to the holiday period.

6.1.2. The positive result in Operational Expenses comes from two key areas, Electricity and Swimwear & Goggle purchasing. With all heating provided by electricity, we see higher usage in the winter months when the greatest load is on the heating systems, which is balanced out now over the summer months when there is significantly less demand on our heating plant due to increased ambient temperatures. Retained stock levels from the previous year's Covid lockdown and decreased attendance has impacted our ability to realise income by selling swimwear product. This has resulted in us ordering less replacement stock and decreasing purchasing budgets for future years.

6.2. **Community Implication**

6.2.1. The situation surrounding Covid and its impact on business and the community is both unprecedented and dynamic making it difficult to predict future effects. In some areas including Learn to Swim and casual recreation we continue to see impact from customers either not feeling comfortable to return to busy areas and group activities or being unable to due to financial reasons.

6.2.2. Further exploration of the outcomes of the District Aquatic Strategy will enable us to better serve the community's changing needs, accounting for growth within the District.

6.3. **Risk Management**

6.3.1. Staff continue to monitor and comply with all guidance coming from the Government and Ministry of Health. Ongoing planning has ensured staff are able to put appropriate measures in place, often at short notice, such as in the two most recent level changes. The Aquatics Industry continues to meet regularly to discuss, plan and share industry best practice solutions.

6.3.2. To ensure clear and consistent messaging, staff continue to work with Councils Communications & Engagement and Health & Safety teams to circulate clear and relevant advice to the Community and follow all advice from Ministry of Health.

6.3.3. Decreased attendance affects the revenue split between ticket sales and rates revenue. Staff will continue to monitor revenue and expenses closely, reporting regularly, working to refine the business model to identify efficiencies and meet the community demand for low cost, safe and enjoyable recreation opportunities.

6.4. **Health and Safety**

6.4.1. Customer safety is key to the ongoing success of the facilities with staff working closely with Councils Health and Safety team, Recreation Aotearoa, CDHB and other key groups to ensure our ongoing operation continues to comply with Ministry of Health instructions and guidance.

6.4.2. Currently, Level 2 restrictions include contact tracing, additional cleaning, decreased head count and crowd control to ensure a safe operation for both customers and staff.

6.4.3. Poolsafe accreditation requires robust practices around reporting, investigation, trending and management of both staff and public accidents. This is on top of the Council's Health and Safety requirements and ensures a comprehensive overview.

7. CONTEXT

7.1. **Policy**

7.1.1. This matter is not a matter of significance in terms of the Council's Significance and Engagement Policy.

Legislation

7.1.2. Health and Safety at Work Act 2015

7.1.3. Poolsafe - Though not currently a legislative requirement, Poolsafe accreditation is recognised as industry best practice, representing a base safe standard for operating a public aquatic facility following a coronial enquiry delivered in October 2006.

7.2. **Community Outcomes**

7.2.1. There is a safe environment for all.

7.2.2. There is a healthy and sustainable environment for all.

7.2.3. Public spaces and facilities are plentiful, accessible and high quality.

7.2.4. People are friendly and caring, creating a strong sense of community within our District.

7.2.5. Our community's needs for health and social services are met.

7.2.6. People have wide ranging opportunities for learning and being informed.

7.3. **Delegations**

7.3.1. This committee has delegated authority for the governance of the Aquatic Facilities.

WAIMAKARIRI DISTRICT COUNCIL

REPORT FOR INFORMATION

FILE NO and TRIM NO:	GOV-01-04 / AQU-02-09 / 210504070534
REPORT TO:	Community and Recreation Committee
DATE OF MEETING:	18 May 2021
FROM:	Matthew Greenwood, Aquatic Facilities Manager
SUBJECT:	Aquatic Facilities Update
SIGNED BY: **(for Reports to Council, Committees or Boards)**	Department Manager / Acting Chief Executive

1. SUMMARY

1.1 This report is to provide the Community and Recreation Committee with a summary of the Aquatic Facilities year to date progress against the units most significant Key Performance Indicators. It includes a summary of Aquatic Facilities Attendance, Water Treatment results and a budget update for the year to March 2021.

1.2 This report highlights our recent results of Waimakariri's Poolsafe accreditation audit.

1.3 Further, this report seeks approval for the purchase and installation of a height access bridge at Dudley Park Aquatic Centre to resolve access issues.

Attachments:

i. Monkeytoe Height Access Dudley Roof Quote and Spec No. 210505071569.

2. RECOMMENDATION

THAT the Community and Recreation Committee:

(a) **Receives** report No. 210504070534.

(b) **Notes** Aquatic Facilities progress against its key performance indicators including Facility Attendance, Financial results and Water Quality.

(c) **Notes** Waimakariri Aquatic Facilities were awarded Poolsafe accreditation.

(d) **Notes** purchase of a height access bridge at $6,226.56.

(e) **Notes** that this purchase will result in an overspend of $3,443 from Dudley's Health and Safety budget.

3. BACKGROUND

3.1 The Waimakariri District Council's Aquatic Facilities team deliver strong aquatic programmes and enjoyable recreation opportunities for the ongoing wellbeing of our community and visitors. We do so from four sites, two indoor year round facilities and two seasonal summer pools which operate over the summer period, from October to April.

3.2 The Aquatic Facilities team work closely with partner organisations, clubs, trusts and interest groups to support water safety programming, grow and develop swimming and Aquatic exercise initiatives and work with the Council to ensure our facilities are inclusive places, accessible to all members of the community.

3.3 The Waimakariri District Council has been part of the Poolsafe programme since its early days as, in lieu of other legislation; it offers an independent assessment against key operating criteria. Further, being involved in this programme offers the opportunity to both share industry best practice examples and be involved in the process of developing new national standards.

3.4 The skylights at Dudley Park Aquatic Centre allow a degree of natural light which improves customer comfort and allows us to minimise the use of fluorescent lighting during the day. In 2016 one of these skylights failed during the middle of the night, with glass falling onto poolside and into the main pool. Subsequent investigations identified that the skylights were made with toughened glass with these being removed and replaced with laminated glass to ensure any future failure is largely contained.

4. ISSUES AND OPTIONS

4.1. Aquatic Facilities Attendance

The following table provides a summary of the Aquatic Facilities attendances for the 20/21 year and a comparison with the previous year.
Recreation – Incorporates all casual swim types; adult, child, family, lane and leisure swims
Prepaid – This includes redemption of all concession and membership card types.
Programmes – Learn to Swim, Aquarobics and Schools programmes.

Attendance type	Kaiapoi Aquatic Centre			Dudley Park Aquatic Centre		
	Apr-21	Mar-21	Apr-20	Apr-21	Mar-21	Apr-20
Programmes	1897	4297	0	3522	6982	0
Recreation	1688	1331	0	8790	6220	0
Pre-Paid	979	1155	0	2967	3245	0
Total	**4564**	**6783**	**0**	**15279**	**16447**	**0**

In the table above, you can see the start of a school holiday period and the end of the school term. This is shown by the increase in Recreation swims and decrease in Programmes attendances. Most notably, the year on year comparison is empty for April 2020 with both centres closed all month in line with last years MoH Covid restrictions.

4.2. Aquatic Facilities Water Quality Update

Water quality at the Aquatic Facilities is measured both internally throughout the day by staff, and externally through monthly microbiological tests conducted by an independent lab. The table below indicates the achievement of the required PoolSafe and New Zealand water quality standards as measured by facility and month.

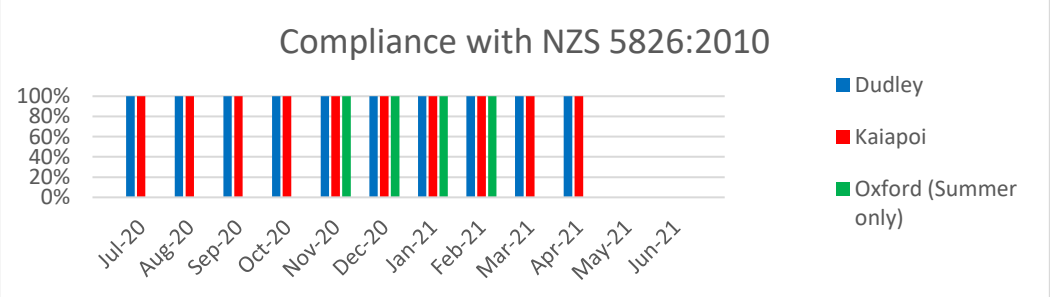

All testing at the Aquatic Facilities has met or exceeded New Zealand and PoolSafe standards for the 2020/21 year to date.

As noted by the CDHB and World Health Organisation there is no evidence that Covid is waterborne or can spread through the use of pools. Our facilities utilise Sodium Hypochlorite disinfection and tertiary Ultra Violet treatment systems, which have both proven effective disinfectants.

4.3. Update to Poolsafe accreditation process following Covid interruptions

While it is not currently a legislative requirement, Poolsafe accreditation is recognised nationally as the industry best practice standard for the operation of public facilities.

The process was developed by Recreation Aotearoa, formerly the New Zealand Recreation Association, in 2006 following a coronial inquiry into a drowning event in the North Island. Facilities are assessed against the standard set by an advisory group made up of members from across the industry. The assessors, who are industry professionals from across the sector, are sent out to facilities around February each year as this ensures they are able to capture the summer pools in operation also. Unfortunately, ongoing changes in Covid levels required the postponement of these assessments, which were pushed out to March.

The assessment consists of a report completed by facilities and sent to assessors prior then an onsite visit and interviews with staff. It covers all areas of facility operation from staff qualifications, ongoing training, hazard resolution, accident reporting, water treatment, to facility policy and procedures.

In late April staff received word that our three facilities have met the requirements and have been awarded Poolsafe accreditation for another year.

4.4. Skylight repair and roof access issues

During an annual facility wash down in April, while a contractor was tidying up his equipment the nozzle of a heavy duty water blasting hose caught the edge corner of the top pane of a double glazed skylight smashing the glass. The laminated glass performed as it should, staying together with the internal pane remaining intact, meaning no need for clean-up and low risk to staff and customers.

At this stage, the offending pane has been left in situ, while a new unit is sourced. While it doesn't look good, this solution is superior to replacing the window with a board which would be less air and water tight, introducing additional cooler air and impacting on customer comfort and our levels of service. The contractor in question was hugely apologetic and has agreed to meet all costs of replacement.

In 2016, one of the skylights failed during the night with glass falling both on the poolside concourse and into the pool, requiring a closure and full pool drain down to remove the glass. It was discovered that the glass installed during construction was toughened but not laminated. A further closure was required to facilitate the full replacement of all skylights replacing toughened with laminated glass to ensure any future breakage remained intact.

During the subsequent debrief and incident investigation into the most recent breakage, an access safety issue was highlighted. Internal access to the building roof at Dudley is possible via ladders in the plant room but access to the pool hall roof beyond is blocked by the row of skylights. Previously we have been able to get around this with the contractors using a scissor lift to climb onto the low end of the building. With the ongoing development of health and safety standards and better understanding of risk factors which cause accidents, our contractor has advised their training and standards now forbid them from exiting an elevated work platform while at height which means this method is no longer an option.

During the replacement works in 2016 a bridge was installed to aid access however, this was only a temporary structure and removed at the end of the works. A permanent bridge structure would address this issue and ensure future access to the pool hall roof will be in a safe and compliant fashion. It is important to note if we were building now, we would be required to include this access structure. Any eventual solution is required to not only span the glass but navigate between two rooves with different heights and slopes. To this end advice was sought from our Health and Safety team who had worked with a number of contractors for heights access solutions on the Rangiora Service Centre. The quote for this work came back at $6,226.56 (excl. gst) which was far cheaper than initially expected however, this is not within our current health and safety budgets.

Staff recommend overspending our Health and Safety budget on this purchase to ensure any future access can be done so in a safe manner. The Health and Safety at work act requires us to take all practicable steps to ensure the safety of staff and contractors while on site and this spend would ensure our ongoing compliance.

Were we not to proceed with this work, it is likely that we would be unable to source contractors who are able to complete these works, meaning the Pool hall roof span would then go unmaintained.

Alternatives have been explored, including replacing the window with a walkable steel plate however, this leaves the step over the parapet with the window frame not designed for that application and the cost of further investigation, engineering and installation likely to be cost neutral or more expensive for a suboptimal solution.

Pictured: area where potential bridge will be installed to facilitate safe access from the plant room roof on the left to the Pool Hall roof on the right.

4.5. The Management Team have reviewed this report and support the recommendations.

5. COMMUNITY VIEWS

5.1. Groups and Organisations

The replacement of the skylight will likely require some crowd management and partial facility closure to manage the risk of contractors working above. Any impact is likely to be minimal, with the work scheduled to occur outside of peak use.

5.2. Wider Community

Staff ran the in house General Customer Satisfaction survey in early April and were pleasantly surprised by the result. Customers gave the Aquatics team an overall satisfaction score of 96%. Comments were largely supportive of both the facilities and staff with some areas for improvement being the timings of Aquarobics classes and cleaning at peak times. The survey was available at reception and emailed to our Concession and Membership customers however we received just over 300 responses, which isn't as high as we would have liked but is very consistent with previous survey responses. We are currently working with the Councils Communications and Engagement team to use their expertise to improve our survey programme.

6. IMPLICATIONS AND RISKS

6.1. Financial Implications

The following table summarises the Aquatic Facilities operational financial position in the 2020/21 year as at March 2021.

Aquatic Facilities Budget Summary	**YTD Actual $'000**	**YTD Budget $'000**	**Variance $'000**
Operational Income	972	1007	(35)
Rates Funding	2,564	2,555	9
Total Income	**3,537**	**3,562**	**(25)**
Operation Expenses	2,379	2,361	(17)
Maintenance	190	201	11
Overheads	500	510	10
Internal Interest	225	219	(5)
Depreciation	381	410	29
Total Expenditure	**3,675**	**3,702**	**27**
Total Surplus (deficit)	**(138)**	**(140)**	**(2)**

6.1.1. The uncertainty surrounding Covid especially in the early part of the financial year, continues to impact the business as public attitudes around social and group activities evolve. The impact of this is clearly shown in the reduced Operational Income result. Across the year to date figures we continue to see decreased take in Learn to Swim, Swimwear sales, and facility hire. Promising results in family and recreation income swim types over the past holiday periods have helped to offset some of this reduced take with payment due back for March School Swimming Sports facility hires helping to increase income.

6.1.2. The Operational Expense result is largely due to overhead expenses including Information technology and Housing costs. The operating expenses directly incurred by each of the facilities are running close to budget. Learn to Swim staffing is overspent, due to the need to continue to meet contractual obligations for staff and paying for staff time used elsewhere within Council during Covid closures. This is balanced in part by savings from two key areas, Electricity and Swimwear & Goggle purchasing. With all heating provided by electricity, we see higher usage in the winter months when the greatest load is on the heating systems, which is balanced out over the summer months when there is significantly less demand on our heating plant due to increased ambient temperatures. Retained stock levels from the previous year's Covid lockdown and decreased attendance has impacted our ability to realise income by selling swimwear product. This has resulted in us ordering less replacement stock and decreasing purchasing spend for future years.

6.2. **Community Implication**

6.2.1. Further exploration of the outcomes of the District Aquatic Strategy will enable us to better serve the community's changing needs, accounting for growth within the District.

6.3. **Risk Management**

6.3.1. Staff continue to monitor and comply with all guidance coming from the Government and Ministry of Health. Ongoing planning has ensured staff are able to put appropriate measures in place, often at short notice, such as in the two most recent level changes. The Aquatics Industry continues to meet regularly to discuss, plan and share industry best practice solutions.

6.3.2. To ensure clear and consistent messaging, staff continue to work with Councils Communications & Engagement and Health & Safety teams to circulate clear and relevant advice to the Community and follow all advice from Ministry of Health.

6.3.3. Decreased attendance affects the revenue split between ticket sales and rates revenue. Staff will continue to monitor revenue and expenses closely, reporting regularly, working to refine the business model to identify efficiencies and meet the community demand for low cost, safe and enjoyable recreation opportunities.

6.3.4. Approval of the proposed height access bridge will ensure Council continues to take a robust approach to the reduction of risks to customers, staff and contractors within its facilities.

6.4. **Health and Safety**

6.4.1. Customer safety is key to the ongoing success of the facilities with staff working closely with Councils Health and Safety team, Recreation Aotearoa, CDHB and other key groups to ensure our ongoing operation continues to comply with Ministry of Health instructions and guidance.

6.4.2. Poolsafe accreditation requires robust practices around reporting, investigation, trending and management of both staff and public accidents. This is on top of the Council's Health and Safety requirements and ensures a comprehensive overview.

6.4.3. Council has strict Working at Heights procedures, which will be adhered to during the replacement of the broken skylight and installation of the access bridge.

7. CONTEXT

7.1. Policy

7.1.1. This matter is not a matter of significance in terms of the Council's Significance and Engagement Policy.

7.2. Legislation

7.2.1. Health and Safety at Work Act 2015

7.2.2. Poolsafe - Though not currently a legislative requirement, Poolsafe accreditation is recognised as industry best practice, representing a base safe standard for operating a public aquatic facility following a coronial enquiry delivered in October 2006.

7.3. Community Outcomes

7.3.1. There is a safe environment for all.

7.3.2. There is a healthy and sustainable environment for all.

7.3.3. Public spaces and facilities are plentiful, accessible and high quality.

7.3.4. People are friendly and caring, creating a strong sense of community within our District.

7.3.5. Our community's needs for health and social services are met.

7.3.6. People have wide ranging opportunities for learning and being informed.

7.4. Delegations

7.4.1. This committee has delegated authority for the governance of the Aquatic Facilities.

Monkeytoe

Date: 16/04/2021
Expiry: 15/07/2021
Sales Consultant: Logan

QUOTATION FOR:

Waimakariri District Council
Private Bag 1005, Rangiora, Rangiora, NEW ZEALAND, 7440
Attention:
P:
E:

Proposal #: 0053979 Rev: 0

Dudley Pool, access set for difference in roof levels

ITEM CODE	DESCRIPTION	REF. DOCS	QTY	VALUE
CUSTLADD	Total for the supply, freight and installation of the Monkeytoe access set for access between two roof levels and to safely cross over glass on upper roof - non-caged ladder approx 1.5m for difference in roof levels with landing platform on lower roof - safety walkway crossing glass 4.0m long with double side handrails, walkway to be clear of glass so glass can be replaced if required - includes all required brackets and fixings - includes lift of products to roof		1	$6226.56
TOTAL INVESTMENT IN NZD EXCL GST:				**$6,226.56**

Monkeytoe

Proposal #: 0053979 Rev: 0

Dudley Pool, access set for difference in roof levels

QUOTATION FOR:

Waimakariri District Council

Private Bag 1005, Rangiora, Rangiora, NEW ZEALAND, 7440

Attention:

P:

E:

ITEM CODE	DESCRIPTION	REF. DOCS	QTY	VALUE

Quote Accepted By:

Order # **Date Required** / /

The above proposal is subject to, and not limited to the following terms and conditions:

General and Finance T&C's
- Payment before dispatch of goods is required unless approved for standard credit terms with Monkeytoe Group Ltd.
- No Retentions accepted unless negotiated at the time of acceptance.
- Only items specifically mentioned in the above descriptions are deemed to be included in the proposal.
- This proposal is based on the condition that all works are accepted as one contract. If the scope of works is reduced Monkeytoe may be required to re-price according to the revised scope of works.

Freight and Installation T&C's
- Safe access is to be provided to the work area for our installers. Scaffolding or EWP's are not included unless specifically noted in the description.
- Work area is deemed to be a safe environment. Customer/Builder to provide edge protection or harness points as required.
- Installation to be carried out during normal hours (7.00am to 5pm) Monday to Friday. Work specially required outside these hours may require a VO to contract.
- Installation has been allowed to be completed as one site establishment. If a staged installation programme is required a VO may be required.
- Customer to provide cranage of product to the roof, unless cranage has been specifically noted as included in the description above.
- If Crane/Hiab has been included in this proposal, the provision of a dogman or rigger is excluded unless noted.
- Freight is based on one delivery to site only. A VO may be required for split deliveries.
- Traffic management is not included in this proposal unless it is specifically noted in the quote.
- Any builders work required to accommodate the product included in this proposal is to be completed prior to installers arriving on site. Delays due to incomplete builders works may incur a VO.
- Where Cranage has been carried out by the customer, the product should be placed on the roof within 30m of the installation locaton.
- Site inductions deemed to be no longer than 30 minutes and can be carried out on the day of installation, please advise if inductions exceed this or are required to be completed before the day of installation.
- It is the responsibility of the customer to unload the product from the freight truck if Cranage is being provided by the customer (forklift may be required).
- Fixing to walls & floors - It is the responsibility of the customer to provide a services layout plan or xray scanning for hidden services when required.

Product T&C's
- Walkway and platforms exclude handrails unless noted.
- Powder coating or painting is included only if noted or shown as a separate line item.
- Installation is included only if noted or shown as a separate line item.
- It is the client's responsibility to ensure all equipment is fixed directly to the platform structure, not the mesh. Unit rails can be provided with the platform, but if they're not specifically mentioned in the quote they are excluded.

Design T&C's
- Monkeytoe Group Ltd assume the building structure is adequate to support the loads that will be applied via our products.
- Design covers for Building Importance Level 2 only, unless specifically noted in this proposal.
- The design and engineering component of this proposal does not cover checking the existing structure unless noted otherwise. This can be included for a separate fee.
- Producer/engineering statements are excluded unless noted and where they are included clause B2 is excluded for aluminium products. Detailed calculations can be provided for additional costs.
- Unless otherwise stated, Monkeytoe has allowed for the provision of up to 2 revisions of shop drawings to accommodate requested design changes. If further design revisions are requested, this could result in a VO extra to the quoted sum.

Monkeytoe

PRODUCT SPECIFICATION SHEET

WALKWAYS

Monkeytoe Smartwalk Walkway

- Non-levelled (0-6deg.) with double handrail

PRODUCT DESCRIPTION

High tensile aluminium construction incorporating the amplimesh deck which is welded into the edge bearer extrusions to form a modular walkway for commercial & industrial applications between 0-6 degrees, with double handrails.

TYPICAL USES / APPLICATIONS

- Any roof top on commercial or industrial building/plant (Steel, membrane, concrete or timber roof)
- Infill modules for riser shafts
- Bridge walkways
- Spanning bund edges
- Access over skylights
- Access routes to industrial plants

CHARACTERISTICS / ADVANTAGES

- Walkway modules can span up to 3000mm between supports
- Mounting capability for any roofing profile
- No additional roofing penetrations for mounting
- All loading/weight is transferred to building or support structure
- Natural wind & rain washing in outdoor situations
- Non-corrosive marine grade aluminium
- Non-slip grip surface
- Engineered to 2.5kPa per metre
- Minimal contact points with supporting substrate
- System uses the unique Monkeytoe mounting clip when installed on roof tops
- NOTE: when roof pitch is greater than 12deg. walkway must have handrail on down side.

TECHNICAL DATA / MATERIALS

- High tensile T6 marine grade aluminium
- Fixings: Stainless steel 304 grade
- Roof connections: High density UV-resistant polyethlene / class 4 galvanised jacking stud
- Neoprene sealing washers

TESTS

APPROVALS / STANDARDS

- Accordance with AS/NZ 1657
- Designed to AS/NZS 1170
- In accordance with the building B1 structure durability code

WARRANTY

- 25 years materials and 2 years install

INSTALLATION

- Installation works must be carried out only by Monkeytoe or instructed/approved contractors

MAINTENANCE

- Self cleaning when used in outdoor situations
- General cleaning recommended in conjunction with standard building / plant cleaning programme or policy
- Visual inspection for any damage or loose fittings is recommended annually
- No certified maintenance is required that effects lifespan or performance of product

DESIGN LOADS AT 3000mm PURLIN/SUPPORT SPACINGS

Live Load:
Uniformly distributed = 1.0kPa
Concentrated action = 1.4kN

DESIGN LOADS AT 1200mm PURLIN/SUPPORT SPACINGS

Live Load:
Uniformly distributed = 2.5kPa
Concentrated action = 1.4kN

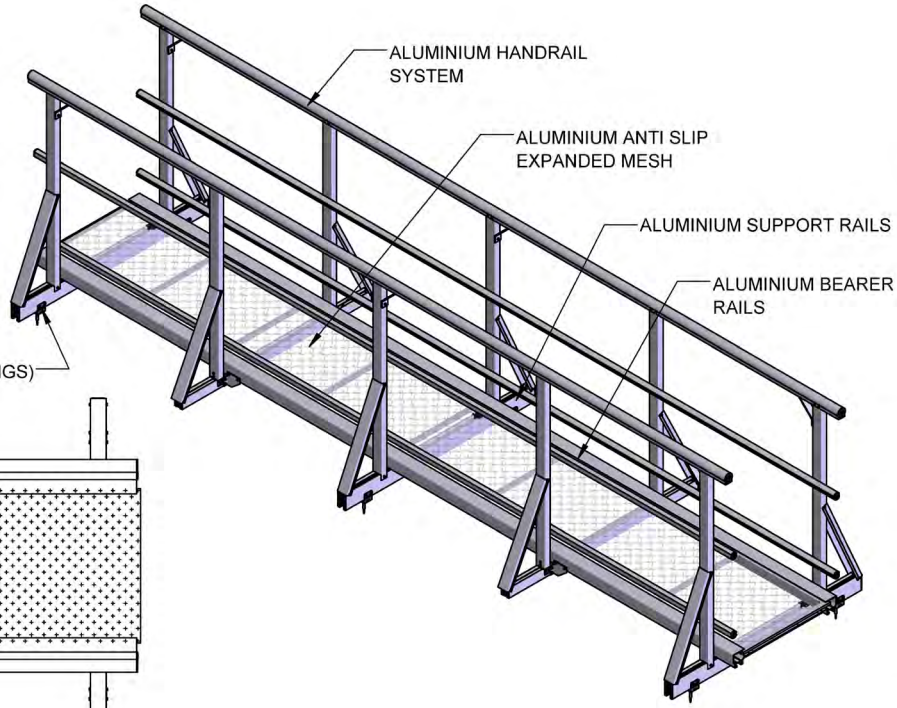

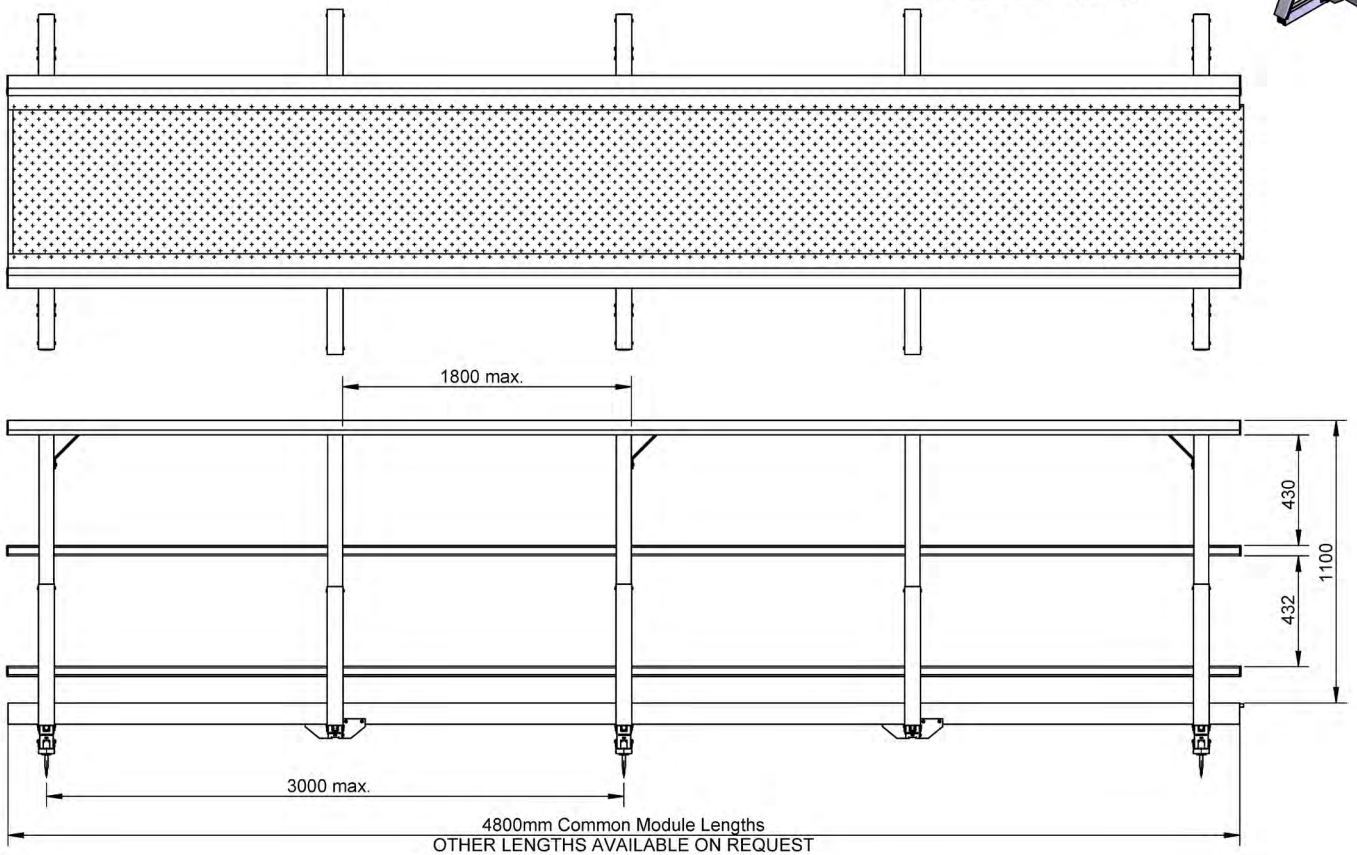

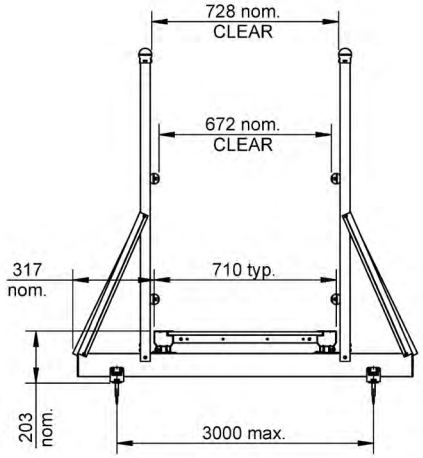

NOTES:

1. MAXIMUM ROOF PITCH WHERE NON LEVELLED WALKWAY IS RUNNING ACROSS THE ROOF = 7°

2. MAXIMUM ROOF PITCH WHERE NON LEVELLED WALKWAY IS RUNNING DOWN THE ROOF = 20°

3. DESIGNED IN ACCORDANCE WITH:
- AS/NZS 1170.
- STRUCTURAL DESIGN ACTIONS, B1 & B2 DURABILITY CODES.
- AS/NZS 1657:2013

Monkeytoe
EVERYTHING BETTER
0800 658 637 - www.monkeytoe.co.nz

SMARTWALK - NON LEVELLED - DOUBLE SIDE HANDRAIL		
MONKEYTOE		
DWG No: 2004-MSW-NL-03		01/05/2018
	SHEET 1 OF 1	A3
	SCALE 1:20	REV:01
DO NOT SCALE	DIMENSIONS IN MILLIMETERS	

This drawing and associated design is the copyright and property of Monkeytoe Ltd. It shall not be used for any purpose or project, without prior written consent other that designated by Monkeytoe Ltd. ©

WAIMAKARIRI DISTRICT COUNCIL

REPORT FOR INFORMATION

FILE NO and TRIM NO:	GOV-01-04/210305037871
REPORT TO:	Community and Recreation Committee
DATE OF MEETING:	23 March, 2021
FROM:	Paula Eskett – District Libraries Manager
SUBJECT:	Library update to 5 March, 2021
SIGNED BY: **(for Reports to Council, Committees or Boards)**	Department Manager / Acting Chief Executive

1. **SUMMARY**

1.1 This report provides an update on key activities, service's, events and customer service improvements undertaken delivered by the Waimakariri Libraries team from December 2020 until March 5 2021.

1 RECOMMENDATION

THAT the Community and Recreation Committee:

(a) **Receives** report No. 210305037871

(b) **Notes** customer service improvements, community feedback, programmes and engagement, also improved staff welfare offered by Waimakariri Libraries, from December 2020 to March 2021.

(c) **Circulates** the report to the Boards for their information.

2 BACKGROUND

3.1 The Waimakariri Libraries aim to promote reading, literacy, and learning; support a stronger, healthier and more resilient community; promote a culture of exploration and creativity; contribute to the economic wellbeing of individuals and the community, and deliver excellence in public service.

See the: Waimakariri Libraries' Strategic Framework 2018-2020 for details (TRIM: 180314027362 and 180924110635).

3 ISSUES AND OPTIONS

3.1 Summer Reading Challenge 2020/21

Mā te whakaaro nui e hanga te whare; mā te mātauranga e whakaū

Big ideas create the house; knowledge maintains it

3.1.1 The Summer Reading Challenge team created an innovative program for all ages to participate this year, with a focus on sustainability. This is the first year the Summer Reading Challenge was conducted completely online through the Beanstack app, and our team did an amazing job to ensure the program was able to go ahead due to the uncertainty of COVID-19 restrictions.

3.1.2 By having the SRC be entirely online, we were able to: reduce the amount of challenge cards printed, be more intentional with the incentives and prizes handed out, and spread knowledge about, and engage people in, sustainable activities.

3.1.3 The focus on sustainability popular with participants and families across the district. Our team even ensured that the snacks provided at the teen party used zero waste packaging. A mother of three children was so happy for the sustainable nature of the summer reading challenge, and appreciated the thought that had gone into the challenges and prizes that were given out. It was in line with what she was trying to teach her children.

3.1.4 Families, and participants who registered were given the option to indicate which school their children attended. The following 23 schools across the district were represented:

Ashgrove School, Ashley School, Clarkville School, Cust School, Homeschool, Kaiapoi Borough School, Kaiapoi High School, Kaiapoi North School, North Loburn School, Ohoka School, Oxford Area School, Pegasus Bay School, Rangiora Borough School, Rangiora High School, Rangiora New Life School, Sefton School, St Joseph's School, Southbrook School, Swannanoa School, Tuahiwi School, View Hill School, West Eyreton School, Woodend School.

3.1.5 P**ositive feedback from the Summer Reading Challenge:**

- The app was very easy to use, great way to keep track of what I was reading 😍📖
- We found the app a really good method this year :-)
- Great support with regards to taking the challenge on line, due to possibility that a Lockdown could happen again.
- 'My children spent time with their grandparents, and did some of the challenges with them. Being all online made it easy for them to share this. Was also great for the grandparents to see what books etc. my kids are reading, and to see that not everything they do on a 'device' is bad…….'

3.1.6 **Feedback from teen party:**

- Loved the different mixture of reading and challenges.
- I liked being able to just read as many books as I wanted too.
- We all used the website and thought it was really easy and fun!

3.1.7 **Library staff also included positive feedback about their interactions with participants:**

- "I signed three kids up yesterday afternoon and got them doing some challenges and earning badges already. They picked usernames like Reading Magician and Stranger Things and Te Maahia (11) even said, "This is exciting!" when he started watching one of Susi's lego videos. He and his sister used their tickets towards the Cookies in a Jar prize. It was a great way to engage with them." – Laura Caygill, Community Experiences and Diversity Team Leader

3.1.8 **Summer Reading Challenge 2020/21 by the numbers:**

3.2 Waimakariri Libraries Seed Exchange

3.2.1 Nā tō rourou, nā taku rourou, ka ora ai te iwi

3.2.2 *With your food basket and my food basket the people will thrive.*

3.2.3 The Waimakariri Libraries hosted seed raising workshops in all three libraries, to coincide with the traditional planting period after Show Weekend. Families were encouraged to swap their seeds for what they need in a social media post, on 21 October 2020, and to then fill out the deposit, and withdrawal forms inside the desks, in all three libraries.

- Deposits from 21 October – 29 January: 34 people
- Withdrawals from 21 October – 29 January: 43 people

3.2.4 There have been an extraordinary variety of seeds exchanged in this brief three month period:

Broad beans, butter beans, runner beans, marigolds, radishes, Banana peppers, flax, peonies, rocket, cress, sunflowers, beetroot, calendula, lettuce, goji berries, sunflowers, spaghetti squash, pansies, carrots, cauliflower, melon, gerbera, parsley, swan plant, dwarf broad bean, organic pea, rock melon, flat leaf parsley, wheatgrass, purple poppies, dill weed, lovage, zucchini, dill, tomatoes, parsley, melon, hollyhock, cucumber, broccoli, purple climbing beans, parsnip, cos lettuce, lavender, nasturtium, sweet peas, mesclun mix, giant pumpkin, Queensland blue pumpkin, pink pumpkin, butternut pumpkin, buttercup pumpkin.

Seeds packaged and ready for swapping

3.2.5 The seed raising workshops were well attended across the district:

- Seed Raising Rangiora: 15 Children, 25 Adults.
- Seed Raising Kaiapoi: 11 Children 6 Adults.
- Seed Raising Oxford: 10 Children, 9 Adults.
- Total participation: 36 children, 40 Adults.

3.2.6 Families across the district have shared their plant growth progress, and also commented on how this initiative has inspired them to join other community groups that promote food swaps, and plant swaps. Families who didn't have seeds to exchange were encouraged to take seeds, so that no one could be disadvantaged.

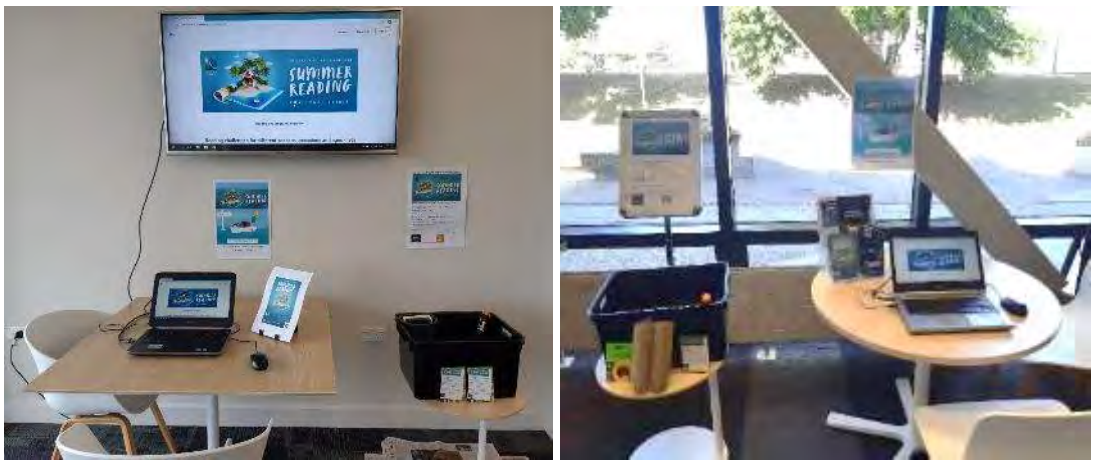

Seed Swap and Summer Reading Stations in Oxford and Ruataniwha Kaiapoi Libraries

3.2.7 In addition to these activities, sow and go stations were installed in all three libraries to support, and engage the public to participate in the Summer Reading Challenge.

3.2.8 Families were encouraged to plant and take a sunflower with them to complete these challenges:

- **0 - 5 years: Summer Reading 2020/21.**
  Nature Challenge Badge:
  Plant a sunflower or help in the garden.

- **5-12 years: Summer Reading 2020/21.**
  Home Life Challenge Badge:
  Grow a sunflower. Plant a sunflower seed, and then measure its growth each week, and record the measurements.

3.2.9 Waimakariri Libraries support the Sustainable Development Goals (SDGs), and these projects connect to the second UN Sustainable Development Goal Zero Hunger: "End hunger, achieve food security and improved nutrition and promote sustainable agriculture."

3.2.10 Seed exchange initiatives also contribute to increase agricultural biodiversity, preserve heritage and heirloom cultivars, and through education, and activities support community food security.

3.2.11 Waimakariri Libraries were grateful to have sponsorship from McAlpines Mitre 10 MEGA Rangiora for these seed raising workshops, and their support was acknowledged in all promotional material.

3.3 New HVAC system at Rangiora amazes

3.3.1 Those staff who were working at the Rangiora Library when it first opened nearly twenty five years ago, will remember the thrill of moving into and working in the new facility, which even today, has stood the test of time with a design which is light and welcoming , and which has always had a “good feel”.

3.3.2 Rangiora Library has become the community hub and meeting place for our exponentially growing district alongside its role as the leading provider of the District’s informational, educational and recreational needs by providing materials that inform, inspire, entertain and sometimes challenge users.

3.3.3 However, the building also has had a downside, in the form of a heating and cooling system which has been less than ideal. Cooling of the building in the heat of summer has always been a huge challenge, and has created a very unpleasant work environment for staff, as well as being a deterrent to many borrowers, many of whom have left the building because of the heat and lack of air movement in the library.

3.3.4 This has been an ongoing problem for many years. Happily, these issues are now a thing of the past, since a new HVAC system has been installed, along with a giant ceiling fan to move the air around.

3.3.5 Heat pump in Teen area:

3.3.6 As this is being written, the outside temperature is in the high thirties, and the Rangiora Library is an enticing haven of cool and respite from the extreme heat of the day. The library is now a summertime destination rather than a place to be avoided on hot days, and the appreciation from borrowers is very evident. Many borrowers are commenting on what a pleasant environment the library is to walk in to, in contrast to the heat outside. Favourable comments and vocal appreciation of the new library heating and cooling system is overwhelming.

3.3.7 The staff are also thoroughly enjoying their new work environment, not just in the library, but also in the Workroom and staff tearoom. In the past it has often been hard to focus on the job in hand because of the physical and mental effects of the extreme heat in the building during the summer, but this is now a thing of the past.

3.3.8 A huge thank-you to Council for our new HVAC system. It is hard to overemphasise the appreciation and gratitude of all who work in and patronise the Rangiora Library, for this transformative improvement to one of our district's most well used and important facilities.

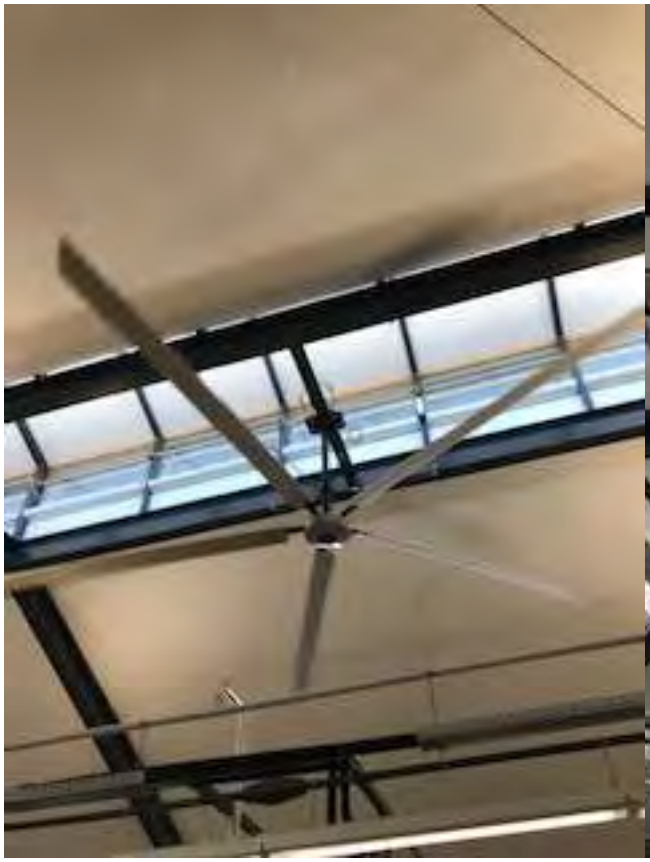

Ceiling fan

Air-conditioning unit (1 of 4)

Teen area

Air curtain at Main door

3.4 Digital Inclusion mind-set creating better outcomes for customers

3.4.1 Customer feedback and adding a personal touch to an automated process have allowed the Libraries Team to reduce digital exclusion and increase equity of use for the Waimakariri community.

3.4.2 Each day the Libraries Team processes automated reminders that let customers know when their items are approaching their due date. These are friendly reminders to renew or return loaned items before any charges accrue; customers receive these by email or post. They are courtesy reminders in addition to the expectation that customers manage their loans, but many rely on them to prevent the accrual of extended loan charges.

3.4.3 Naturally, the postal reminders take longer to reach customers than the emails. For customers without emails, this could mean that charges have already accrued against an item before the customer has received the reminder.

3.4.4 This inequity came to the attention of our District Libraries Manager Paula Eskett and Digital Inclusion Co-ordinator Sarah Stenhouse following strong feedback from a 76-year-old customer about the disadvantage at which this left her.

3.4.5 The proudly independent woman approached the team at Rangiora Library about the situation. She felt that her choice to receive her reminder letters in the mail was putting her at a disadvantage and was having an impact on her civil liberties and rights as a member of the community.

3.4.6 Our staff offered several alternative options to help her manage her loans, such as having books dropped off and picked up by volunteers through our housebound

service, however the social connection of visiting the library in person was an important priority for this customer.

3.4.7 Paula subsequently spoke with her over the phone and arranged for the woman to spend time one-on-one with Sarah, who's Digital Inclusion Co-ordinator role is funded by the New Zealand Libraries Partnership Programme (NZLPP).

3.4.8 After meeting the woman in person and viewing the situation with a perfect combination of her knowledge of library processes and her digital inclusion mind-set, Sarah realised that a simple process change could in this case remove the inequity created by the lack of an email account.

3.4.9 Now, instead of printing and posting reminder letters, the team also gives each customer a ring to let them know that their items are due back and that they will receive a reminder in the post shortly.

3.4.10 As the vast majority of the community do use email, the number of reminder letters that we send out is small and phoning these customers is not a large amount of work, but the impact of this small change in process is great; customers without email will no longer be disadvantaged by this fact.

3.5 Spotlight on: Oxford Library

3.5.1 Oxford's library team are celebrating the new year by offering new and exciting programmes and services for the community, alongside refining existing programmes with fresh idea and enthusiasm.

3.5.2 Oxford Hospital book delivery service is a new service for 2021.

3.5.3 Manaaki te kotoa – Be kind to all

3.5.4 Organised by Jeanette Busch, Oxford Library are coordinating a book delivery service through the Oxford Hospital, for our members who are housebound through illness, and injury as part of the Libraries housebound service.

3.5.5 Oxford hospital activities coordinator Judy Roper was concerned patients had minimal access to quality reading material and contacted the library enquiring if they could access large print books, in particular murder/mysteries, animal/vet stories, and biographies.

3.5.6 The team at Oxford now coordinate a monthly book delivery service and are exploring further ways to better serve elderly and housebound library users of the Oxford area.

3.5.7 Libraries recently delivered and donated several boxes of discarded large print books which were very gratefully received

3.5.8 Stepping Up classes are now a regular offering from Oxford Library, thanks largely to the funding from the New Zealand Libraries Partnership Programme (NZLPP)

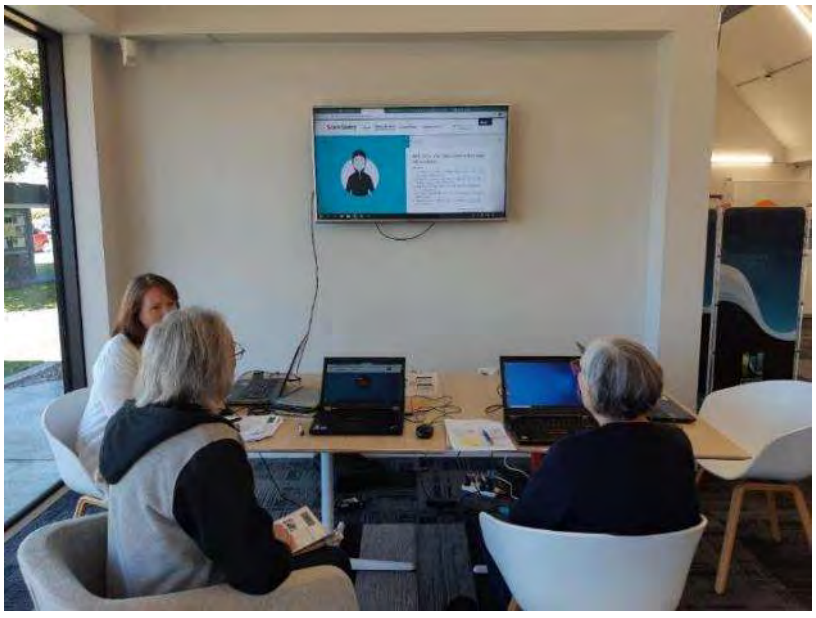

3.5.9 Whaowhia te kete mātauranga – Fill the basket with knowledge

3.5.10 Sarah Stenhouse – NZLPP Digital Inclusion co-ordinator, and Susanne Schulze, both facilitate Stepping Up classes in Oxford, which aim to support older adults in gaining confidence and experience using and exploring digital tools technology.

3.5.11 The addition of a dedicated NZLPP coordinator to support digital inclusion in our district has seen unprecedented demand for classes.

3.5.12 Stepping Up classes are very popular due to there being no cost and low ratio of learners to tutors.

3.5.13 Most recently a two hour introduction to online banking was held focusing on

- Gaining an overview of how online banking works.
- Being scam savvy
- Encouraging participants to discuss fears and challenges for support and solutions.

3.5.14 Tangata ako ana I te whare, te turanga ki te marae, tua ana – A person who is taught at home, will stand collected on the Marae.

3.5.15 Since lockdown in 2020, families globally have experienced first-hand what it is like to learn from home, with parents becoming teachers, guiding, encouraging and coaching their child's education from home

3.5.16 Oxford area have a dedicated group of families who have chosen to home school their children long before COVID-19. They meet once a week to network with each other at the Pearson Park Pavilion. Library staff in Oxford also organise a fortnightly learning support session for parent teachers, and their children students to connect library resources and books with their learning from home.

3.5.17 Already keen users of Borrowbox, our popular e-audio book platform who love the ability to listen to, as well as read books from our collection, families were thrilled when recently introduced to quality e-resources accessible to library members only through our EPIC online subscriptions

- Tumble Books
- Story Box Library
- the vast wealth of information available on New Zealand Geographic
- World Book Online.

These are valuable platforms to add to their kete for learning from home.

3.6 The Management Team have reviewed this report and support the recommendations.

4 IMPLICATIONS AND RISKS

4.1 Financial Implications

4.1.1 Library activities are being met from within the Libraries budgets. The following table summarises the Libraries' financial position as at 22 January 2020.

Library

Summary Report January 2021

	Actual	Budget	
Revenue			
Revenue	111,266	76,298	
Rates	2,269,877	2,263,287	
	2,381,143	2,339,585	
Operating Expenses	1,161,680	1,164,114	
Maintenance	205,988	294,292	
Overheads	480,542	484,648	
Internal Interest	8,773	10,230	
Depreciation	406,219	499,456	
	2,263,202	2,452,740	
Surplus/ (Deficit)	117,941	(113,155)	

4.2 Community Implication

4.2.1 Through the delivery of the Waimakariri Libraries' Strategic Framework 2018- 2020, (180314027362), users of the libraries are better informed, connected, engaged, and empowered, and the community can have confidence that the Waimakariri Libraries are providing a high standard of public service.

4.3 Risk Management

4.3.1 Risks are identified, analysed and managed in accordance with relevant Council policy and practice.

4.4 Health and Safety

4.4.1 Robust reporting, investigation, trending and management of both staff and public accidents and incidents is maintained in accordance with Council's Health and Safety policy and practice.

5 CONTEXT

5.1 Policy

5.1.1 This matter is not a matter of significance in terms of the Council's Significance and Engagement Policy.

5.2 Legislation (Local Government Act 2002)

5.2.1 Part 2 - Purpose of local government, and role and powers of local authorities

Subpart 2 - 11A Core services to be considered: in performing its role, a local authority must have particular regard to the contribution that the following core services make to its communities: including (e) libraries.

5.2.2 Part 7 - Specific obligations and restrictions on local authorities and other persons

Subpart 4 - Public libraries - 142 Obligation to provide free membership of libraries

5.3 Community Outcomes

Library activities support the following community outcomes:

- Public spaces and facilities are plentiful, accessible and high quality
- People have wide ranging opportunities for learning and being informed
- People are friendly and caring, creating a strong sense of community in our District
- The community's cultures, arts and heritage are conserved and celebrated
- Businesses in the District are diverse, adaptable and growing

5.4 Delegations

5.4.1 The Committee has delegated authority to develop goals and strategies for Library Services

Paula Eskett
DISTRICT LIBRARIES MANAGER

WAIMAKARIRI DISTRICT COUNCIL

REPORT FOR INFORMATION

FILE NO and TRIM NO:	GOV-01-04/210503069799
REPORT TO:	Community and Recreation Committee
DATE OF MEETING:	18 May 2021
FROM:	Paula Eskett – District Libraries Manager
SUBJECT:	Library update to 30 April, 2021
SIGNED BY: (for Reports to Council, Committees or Boards)	Department Manager / Chief Executive

1. SUMMARY

1.1 This report provides an update on key activities, events and customer service improvements undertaken delivered by the Waimakariri Libraries team in December 2019 and January 2020.

2 RECOMMENDATION

THAT the Community and Recreation Committee:

(a) **Receives** report No. 210503069799

(b) **Notes** the customer service improvements, community feedback, programmes and engagement and NZLPP outcomes by Waimakariri Libraries, from 6 March - 30 April, 2021.

(c) **Circulates** the report to the Boards for their information.

3 BACKGROUND

3.1 The Waimakariri Libraries aim to promote reading, literacy, and learning; support a stronger, healthier and more resilient community; promote a culture of exploration and creativity; contribute to the economic wellbeing of individuals and the community, and deliver excellence in public service.

See the: Waimakariri Libraries' Strategic Framework 2018-2020 for details (TRIM: 180314027362 and 180924110635).

4 ISSUES AND OPTIONS

4.1 Shelving improvements at Ruataniwha Kaiapoi Library

The first floor of Ruataniwha Kaiapoi Library now has improved spaces for the community, and the general non-fiction collection is now significantly easier to navigate, following a layout change implemented in late April.

Over just four days from the 20-23 April the Libraries Team and helpful Aquatics Team colleagues removed the entire general non-fiction collection from the shelves so that they could be fitted with castors for easy relocation around the library floor.

The team needed to remove close to 12,000 books from 68 bays of shelving, before storing them in Meeting Room One and re-shelving them.

Hydestor Shelving supplied and fitted the castors.

Significant planning went into creating the new layout from existing shelving, combining staff experience with anecdotal community feedback, with the intention of making the task of finding specific titles and subjects much more logical and user-friendly for staff and customers, to improve access to Meeting Room One, and to increase the usable space upstairs.

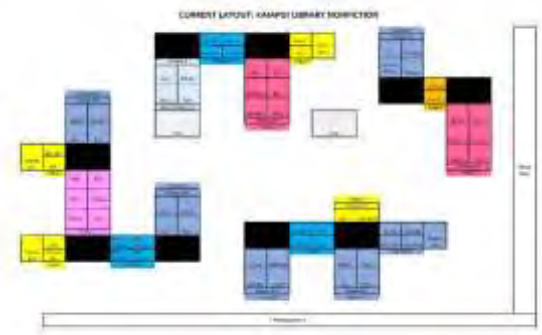

Image 1: The former layout of the general non-fiction collection at Ruataniwha Kaiapoi Library, which included jumps in the Dewey Decimal system

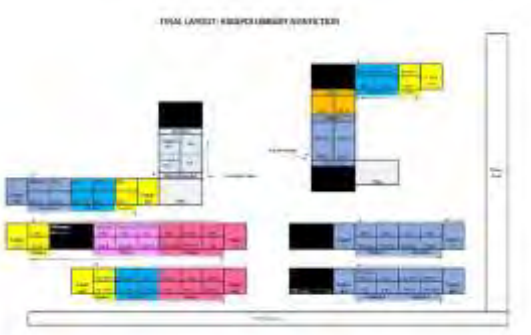

Image 2: The new layout of the general non-fiction at Ruataniwha Kaiapoi Library, with the Dewey Decimal System in a logical run.

Feedback and observation of use so far indicates we have achieved these goals, with clear access and visibility through to the meeting rooms from the top of the main stairs, and separate study and seating spaces being well-used by customers.

The Dewey decimal sequence now has a very easy flow, and the area also has an unobstructed line of sight from south to north, looking towards the river from the lift.

With the shelving entirely movable, we now have the flexibility to cater to different events and to respond to any future changes to the collection and how the community uses it and or space.

Images 3 & 4: The view from the top of the central staircase through to Meeting Room One at Ruataniwha Kaiapoi Library.

Image 4: a new study space with a northern outlook, upstairs at Ruataniwha Kaiapoi Library

Hydestor also supplied and fitted an extra row of up-tilted shelving at the bottom of 35 bays for the library's fiction collection on the ground floor.

This has added much needed ease to the previously packed shelves, allowing for more effective display and promotion, as well as a more enjoyable browsing experience for the community.

Our volunteer shelvers are finding both the fiction and non-fiction collections much easier to shelve following these changes.

No changes were made to the shelving in the New Zealand Room.

4.2 Promoting our collections with visual merchandising

A focus on visual merchandising techniques is benefitting browsers at all Waimakariri library branches.

Assistant Librarian Nicki Chaston, and Customer Services Library Assistants Kay Goldsworthy and Melissa Thomas have created quirky, imaginative and often humorous displays that are rotating around all three libraries for maximum impact.

The displays use material from the entire collection; chosen topics cast a wide net, incorporating adult non-fiction, fiction, children's material, DVDs, music and magazines.

This creates moments of 'serendipitous browsing', introducing customers to items and collections they might otherwise not come across or know about. Children's non-fiction, for example, can be highly informative and brilliantly illustrated, but might often be overlooked by the more mature reader. Similarly, fiction readers may not have ever considered a true-life story, but may then discover that biographies are hugely enjoyable.

Nicki Chaston explains how this can impact our community: "As librarians, we have the potential to entertain and educate our community with the wide range of exciting material we have access to. By setting up interesting, thought-provoking displays, we can catch someone's eye, introducing them to something new to them that might just enhance their life."

With space at a premium for Rangiora Library these targeted displays are helping to keep fresh content front and centre for the community.

Image 5: creative displays at Rangiora and Oxford Libraries

4.3 NZLPP Outcomes: Local storytelling project with Mana Whenua

Waimakariri Libraries has secured funding for a local storytelling project in collaboration with Ngāi Tūāhuriri, via the New Zealand Libraries Partnership Programme (NZLPP).

The project aims to bring to life a local story of importance to Ngāi Tūāhuriri as a digital story, retold by Lynne Te Aika, chair of the Ngāi Tūāhuriri Education Committee, and illustrated by Ngāi Tahu artist Morgan Matthews-Hale of Kaitiaki Studios.

Our goal is to have Te Reo and English versions of the story, which will highlight local fauna, hosted on our libraries website for customers to read at home and for use in our preschool sessions.

We envisage that the illustration images could be turned into a mural to bring the story to life on the walls of Ruataniwha Kaiapoi Library. We are also hopeful of using the images for Libraries branded bags and membership cards.

Ms Te Aika has recently published similar stories for the Ka Au Kahuraki project in Ōtautahi and Libraires Manager Paula Eskett and Community Experiences and Diversity Team Leader Laura Caygill began discussing their ideas with her in March

Final details are still to be determined, but we are excited about the potential of this project to not only bring local stories to life within the library, but as a foundational point on which to build future collaborations with mana whenua.

4.4 Kaiapoi Stash Swap

Keen crafters and haberdashery enthusiasts flocked to Ruataniwha Kaiapoi Library on Saturday 20 March for the library's first Stash Swap event.

The event came about after a discussion with a member of the public, Cynthia Lowe. Ms Lowe had been to Stash Swaps in Christchurch and was looking to hold one here in the Waimakariri District. She is a passionate crafter with many contacts, and does much in the community in this regard.

A Stash Swap is an event where you are able to exchange craft items such as fabric, patterns, and miscellaneous craft supplies, dropping off items you no longer need and then collecting new items to take home to begin a new craft project. No money changes hands, and many materials are then repurposed to live another day.

Community Connections Co-ordinator Anna Patterson co-ordinated the event with Ms Lowe, with the libraries facilitating the hosting and promotion of the event, and Ms Lowe rallying crafting volunteers to man the materials tables on the day.

People were able to donate materials, dropping them off at Ruataniwha Kaiapoi Library the week before. The community's generosity was clearly seen in the amount and quality of the supplies that were donated.

As people dropped items off, many stories were told about the origins of the materials, such as a material and pattern from a wedding dress from the 1950s, and a whole haberdashery sewing kit that otherwise would have gone to landfill.

Some of these people had not set foot in the library prior to this, and we did garner some new memberships from this contact.

About 60 people attended the event, and everyone left with at least one bag. Remaining materials were donated to local charities.

We are now hoping to run this as an annual event.

Image 6: Crafters sorting through donated items at the Kaiapoi Stash Swap

4.5 NZLPP Outcomes: Connecting with Karanga Mai and Rachel's House

Two local groups of young parents have visited our libraries in recent months, following the work of our Community Connections Co-ordinator, Anna Patterson.

In March five young mothers and two support staff visited Ruataniwha Kaiapoi Library from Karanga Mai, the Young Parents College based at Kaiapoi High School.

The purpose of the visit was to introduce the young women to the library and to set them up with library memberships.

Some of the young women were unaware of what the library could offer them and their little ones, so it was important for them to feel comfortable.

We are working to build on this initial connection with our preschool team visiting the early learning centre at the school. We have also donated withdrawn picture books still in good condition to the early learning centre.

Our goal is to also have regular preschool sessions each term throughout the school year that the young mothers can attend with their children.

Rachel's House Trust, a Rangiora-based non-profit organisation that offers support for young parents, visited Rangiora Library in early April.

Customer Services Library Assistant Sally O'Connell held a special storytime session for five children and ten adults including mothers, grandparents and support staff. Everyone joined in with the songs and there was a big round of applause at the end.

Library staff are planning a visit to the group's homebase to introduce them to the services and collections the library offers.

Having a face-to-face connection with a friendly member of the library team can make coming into the library much less daunting for those unfamiliar with our services, and we are pleased to be building these connections with local parenting groups.

4.6 NZLPP Outcomes: Digital Inclusion Connections and Classes

Digital Inclusion Co-ordinator Sarah Stenhouse is leading the team in responding to the increasing demand for digital help and education, and making important community connections to boost the reach of our digital literacy classes and services.

With the recent removal of cheques from our banking system and the related heightened awareness of the importance of digital skills in being able to live a full and connected life, we are matching the substantial increase in interest we are seeing in the classes and services that we offer with greater provision and promotion.

In Term One this year Sarah led the team in delivering more than 20 Stepping Up classes, improving the digital skills of close to 60 people. These classes covered digital banking, smart phones, tablets, email, Google Drive, Pinterest, and how to navigate the Ministry of Social Development Real Me service.

This is a significant increase in our capacity and community impact from two years ago; in term one 2019 (2020's figures being impacted by lockdown), the team delivered just nine classes to 23 people.

The team also delivered two full Better Digital Futures for Seniors courses in Term One. These courses focus on basic computer skills and provide a safe space to explore the digital world.

For both classes, most have been fully booked and a number of people are on our waiting lists. (For effective delivery and learning and the capacity of our teaching spaces in libraries and meeting rooms, classes must have limited numbers.)

Weekly Tech Help drop-in sessions have begun at all three libraries, with 14 people attending sessions in March, and the libraries' website has been updated with a new tab for job-seekers

An additional Tab was added to the library website to provide information for job-seekers and those seeking to improve their digital literacy skills.

Our classes, website, Book a Librarian and Tech Help Drop-in services have been promoted with the CAB, Grey Power, the Woodend Friendship Group, and at Tuahiwi Marae's Healthy Day at the Pā.

The visit to Tuahiwi allowed the team to answer questions about turning Bluetooth on to improve the effectiveness of the NZ Covid Tracer app and instigated a booking for iPad help.

4.7 Pop Up Library at the Pride Picnic

This year the Libraries Team were privileged to operate a Pop Up Library at the North Canterbury Pride Picnic in Victoria Park on Sunday 21 March, showing our support for the LGBTQIA+ community.

With support from the Communities Team and WaiYouth vonuteers, the Libraires Team had a pride-themed selection of books for people to borrow on the day, and offered free badge making.

Attendees were able to request their own individualised badge with their preferred pronouns on it. Using someone's preferred pronouns (she/her, he/him, they/them, etc) is a simple way to show respect and support, and wearing your own preferred pronouns on a badge can be an important signal to people you interact with that you are supportive of the LGBTIQIA+ community. We were astounded at the popularity of our badge making, with queues forming for the service early in the day. Hundreds of badges were made as requested on the day, using templates pre-made by Customer Services Library Assistant Leo Petty.

Images 7 & 8: Queues forming for Waimakariri Libraries free badge making at the North Canterbury Pride Picnic

We issued 12 items from our Pride Library, including to parents with children exploring their identity and/or in the LGBTIQA+ community, joined one new person up to the library, and updated three membership records, including for one person who had recently transitioned

We received comments that people didn't know that we had so many books about LGBTQIA+ issues, and about how much people enjoyed seeing a selection of those books all together in one place for easy browsing.

Customer Services Library Assistant Beth Tavui said of the day:

"It was such a delight to recognise faces of the youth that regularly come into the Rangiora Library. Hopefully they will now realise that the library is a safe and welcoming environment where they can be themselves. I had some conversations that day that I never thought in my 'librarian' role I would be having. I view this as an excellent step though as the youth obviously felt comfortable enough to speak about their situations.

"One of our library regulars who I have known since she was seven (she is now fourteen) was so happy to see me she gave a BIG long hug. That kind of sums up the day in a way. People feeling happy and excited to be somewhere they knew they were totally accepted.

"Another one of regulars who is transitioning who came up to ask if he could swap his pronoun badge. I assured him that he did not need to swap the badge. That he could have both. I said you can identify yourself in as many ways as you like. The relief on his face and then smile said it all. He was very grateful."

Being at the picnic allowed us as a Libraries Team to see the impact of creating a safe and welcoming environment for the LGBTQIA+ community and work is now underway to provide free pronoun badges on library counters across the district,

We are also working with North Canterbury Pride and QTopia to offer our libraries as safe places for young members of the LGBTQIA+ community to meet and connect.

Images 9 & 10: Pronoun badges prepared for front desk counters across Waimakariri Libraries, and the design made by Customer Services Library Assistant Leo Petty for the day.

4.8 Neighbours Day Aotearoa

Waimakariri Libraries celebrated Neighbours Day Aotearoa in March, to inspire people to get to know their neighbours better. This year's theme was 'The Great Plant Swap'.

All three libraries had 'Sow and Go' stations, where visitors were encouraged to choose seeds they would like to plant, and take them home with them.

The stations were promoted at our preschool sessions, reaching more than 230 children and adults across the district.

Each child was able to sow seeds to take home with them, a great opportunity for to learn how to plant seeds and learn the values of sharing, and looking out for your neighbours.

In collaboration with the Community Team, Community Connections Co-ordinator Anna Patterson also helped to facilitate a Neighbourhood Photo Competition on Facebook. The competition encouraged the community to share a photo of doing something neighbourly on the Waimakariri Libraries Facebook page. We were delighted to see people in our community share the following stories:

- "We had a BBQ tea for our new neighbours who are all building next to us. Can't wait until they are finished and we can do this all the time."
- "Our neighbours adore my daughter who is special needs. They buy her yoghurt every week in their groceries, ring up every few days asking how we are. We go over and help them with anything they need and go chat for company about twice a week also."
- "My neighbour gave me some soy sauce since I ran out in the middle of making dinner."
- "Our neighbours feed our cat when we are away and send us photo updates... No she doesn't normally eat dinner at the table!"
- "Love our great neighbours, and discussing landscaping tips!"
- "We love having playdates with our neighbours, and picking flowers + lemons from our gardens' to share with each other."

Image 12: one of the entries in the Neighbourhood Photo Competition

We also invited the community to swap their seeds for what they need in our seed desks. In the Neighbours Day celebration period from 20-30 March, seeds donated included:

Red onion, crisp head lettuce, spinach, tomato, capsicum, leek, watercress, basil, sage, mint, kale, spring onion, pansy, thyme, lettuce, red cabbage, chives, borage, carrot, beetroot, sunflower, bronze sunflower, parsley, kowhai, angelica, pumpkin, grey crown pumpkin, broccolini, buttercup pumpkin, pumpkin, Austrian oil, broad beans, butter beans, broccoli, beetroot, cauliflower, buttercup pumpkins, peas, silverbeet, radish, and sunflower.

4.9 Workshops with the Cancer Society

A Waimakariri Libraries-led writing and speaking group has provided a creative outlet for people with cancer and those affected by the disease, in collaboration with the North Canterbury Cancer Society.

Learning Connections Co-ordinator Jason Clements facilitated The Writers and Orators group for patients and carers, held on Mondays at the Rangiora Library over six weeks.

The sessions focused on writing short prose, poetry, haiku, odes, and responding to the needs of the participants.

The goal was to connect to one of the Mental Health Foundation's Five Ways to Wellbeing, specifically to 'Take Notice', and to remember the simple things that give you joy, or *me aro tonu ki ngā mea māmā noa i ngākau harikoa ai koe.*

The Cancer Society provides support for cancer patients in many ways, including providing transport and accommodation for medical treatments, access to information, counselling services, fundraising appeals, as well as wellbeing, and support groups.

Some participants gave permission to the Cancer Society for us to share the following feedback: "I found the workshop therapeutic and would recommend this to others"

- "This course has been the loveliest thing that has happened to me for a long time. [Jason] has a lovely style of teaching and is very encouraging."
- "Jason is so caring and helpful …I feel very privileged to have this chance to write and be guided to create something very special."

Below are two examples of haiku, and an ode, from writers who were happy to share their work:

springer spaniel
sharing my life full of joy
bringing happiness

- *Grant Edgar*

loving Labrador
diagnoses off balance
sensing brain tumour

- *Stephanie Waterfield*

Ode to my Glasses

Two windows,
Curved,
Sitting on a holy bridge.
Like crystal, not always though.
Bold and beautiful.
Lost sometimes – frustration.
Security needed!
They're housed in a vault,
Lined in satin.
Safe…

- *Wendy Campbell*

The Cancer Society provides support for cancer patients in many ways, including providing transport and accommodation for medical treatments, access to information, counselling services, fundraising appeals, as well as wellbeing, and support groups.

4.10 The Management Team have reviewed this report and support the recommendations.

5 COMMUNITY VIEWS

5.1 Groups and Organisations

Community feedback is captured and reported to the Community and Recreation Committee on a regular basis.

5.2 Wider Community

Community views were canvassed through the Libraries' Annual Customer Satisfaction Survey which was conducted in June 2018. 96.89% of customers rated themselves as Satisfied or Very Satisfied with the Libraries.

6 IMPLICATIONS AND RISKS

6.1 Financial Implications

Library activities are being met from within the Libraries budgets. The following table summarises the Libraries' financial position as at 31 March 2021.

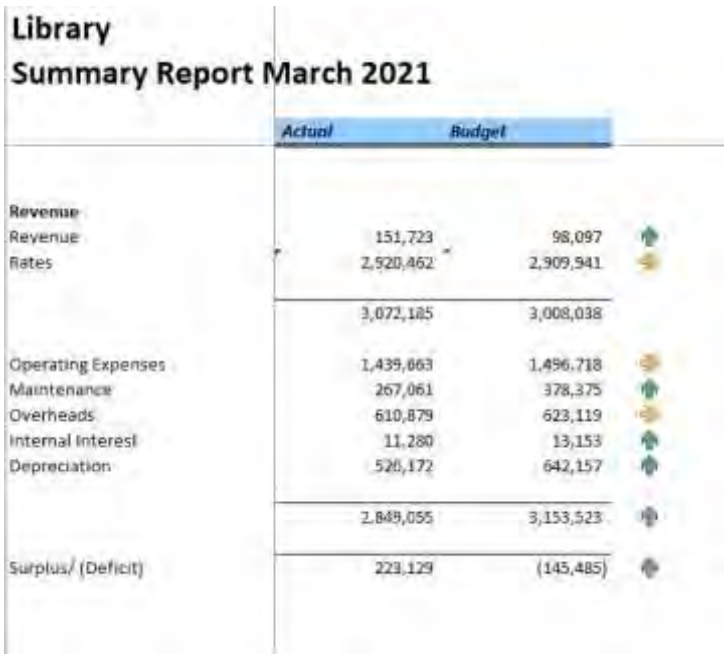

Library
Summary Report March 2021

	Actual	Budget	
Revenue			
Revenue	151,723	98,097	↑
Rates	2,920,462	2,909,941	↓
	3,072,185	3,008,038	
Operating Expenses	1,439,663	1,496,718	↓
Maintenance	267,061	378,375	↑
Overheads	610,879	623,119	↓
Internal Interest	11,280	13,153	↑
Depreciation	520,172	642,157	↑
	2,849,055	3,153,523	↑
Surplus/ (Deficit)	223,129	(145,485)	↑

6.2 Community Implication

6.2.1 Through the delivery of the Waimakariri Libraries' Strategic Framework 2018-2020, (180314027362), users of the libraries are better informed, connected, engaged, and empowered, and the community can have confidence that the Waimakariri Libraries are providing a high standard of public service.

6.3 Risk Management

Risks are identified, analysed and managed in accordance with relevant Council policy and practice.

6.4 Health and Safety

Robust reporting, investigation, trending and management of both staff and public accidents and incidents is maintained in accordance with Council's Health and Safety policy and practice.

7 CONTEXT

7.1 Policy

This matter is not a matter of significance in terms of the Council's Significance and Engagement Policy.

7.2 Legislation (Local Government Act 2002)

Part 2 - Purpose of local government, and role and powers of local authorities

Subpart 2 - 11A Core services to be considered: in performing its role, a local authority must have particular regard to the contribution that the following core services make to its communities: including (e) libraries.

Part 7 - Specific obligations and restrictions on local authorities and other persons

Subpart 4 - Public libraries - 142 Obligation to provide free membership of libraries

7.3 Community Outcomes

Library activities support the following community outcomes:

- Public spaces and facilities are plentiful, accessible and high quality
- People have wide ranging opportunities for learning and being informed
- People are friendly and caring, creating a strong sense of community in our District
- The community's cultures, arts and heritage are conserved and celebrated
- Businesses in the District are diverse, adaptable and growing

7.4 Delegations

The Committee has delegated authority to develop goals and strategies for Library Services

Paula Eskett
DISTRICT LIBRARIES MANAGER

WAIMAKARIRI DISTRICT COUNCIL

REPORT FOR DECISION

FILE NO and TRIM NO:	POL-08-72 / 210325049648
REPORT TO:	Community and Recreation Committee
DATE OF MEETING:	18 May 2021
FROM:	Councillors R Brine (Chair), W Doody and P Redmond
SUBJECT:	Adoption of the Cemetery Policy Recommendation of the Hearing Panel

SIGNED BY: **(for Reports to Council, Committees or Boards)**	Department Manager	Chief Executive

1. SUMMARY

1.1 This report presents the recommendations of the Hearing Panel that considered submissions to the draft Cemetery Policy. This is a new policy giving effect to the Cemetery Strategy adopted by Council in October 2020.

1.2 The Hearing Panel recommends the adoption of the draft Cemetery Policy with the adjustments as described in Section 4.3 of this report.

1.3 The public consultation resulted in ten submissions being received, representing 20 points of submission. Two submitters elected to present their views to the Hearing Panel in person.

1.4 A number of submitters discussed the level of service provided at the cemeteries particularly around maintenance of gardens and trees and head stones.

Attachments:

i. draft Cemetery Policy (Trim: 200916122776)
ii. Minutes of the Hearing (Trim: 210302034893)

2. RECOMMENDATION

THAT the Community and Recreation Committee:

(a) **Adopts** Clause 7.2.5 (iv) Option 2

”One plot may be pre-purchased by an individual for their exclusive use.”

(b) **Notes** Option 1 requires re-validation of the purchase of a plot every 10 years. This proposal was not part of the original draft policy presented for public consultation.

THAT the Community and Recreation Committee recommends:

THAT the Council:

(c) **Receives** report No. 210325049648.

(d) **Adopts** the draft Cemetery Policy (Trim: 200916122776), incorporating the changes made by the Hearing Panel and the Community and Recreation Committee as attached, to take effect on adoption.

(e) **Notes** a copy of this report will be sent to the Community Boards for their information.

3. BACKGROUND

3.1 Development of the Council's Cemetery Strategy (adopted in October 2020) identified the need for a policy to ensure effective and consistent management of the day to day operation of Council-managed cemeteries in the District.

3.2 The policy ensures that our cemeteries are a safe way to care for deceased people, with standards that protect public health and the environment.

3.3 This Cemetery Policy gives effect to Objective 4 of the strategy "*Clear direction to Council staff and the community regarding the use and management of cemeteries is provided".*

3.4 It is acknowledged that Central Government is undertaking a review of the Burial and Cremation Act 1964 and this could impact the policy once the legislation is in place. There will be an opportunity for Council to contribute further to the review through the Select Committee phase.

4. ISSUES AND OPTIONS

4.1. The elements of the draft policy reflect current practice and formalise areas of cemetery management such as the ceding of cemeteries to Council and the recognition of religious/cultural requirements.

4.2. This was not a statutory consultation but it was considered important to seek community views as cemeteries play an important role in our society. Ten submitters took the opportunity to participate in the consultation with two presenting their views to the Hearing Panel in person.

4.3. After consideration of the submissions and receiving further information from staff the following adjustments were made to elements of the policy:

Draft clause	Update as a result of submissions	Reasons
4. Definitions	Where the term 'Funeral Director' is used in conjunction with functions that could be carried out by members of the general public, the term will be changed to 'Applicant'. The term 'Funeral Director' will continue to be used in conjunction with responsibilities assigned to a person employed in that professional occupation.	To ensure the definitions provide clarity throughout the policy.

Draft clause	Update as a result of submissions	Reasons
	The definitions of: Applicant, Contractor, Council Contractor and Community Greenspace Manager will be updated in the policy and the content of the policy will be updated to reflect these changes.	
7.2.5 (ii) Pre-purchase of plots: Pre-purchasing of plots is permitted at the time of an interment if the spouse of the deceased or parents of a deceased child wish to reserve a plot.	The following is added: "or, where a person requests to purchase a vacant plot adjacent to a close relative". Add: Option 1 (iv) Notwithstanding the above, any person may pre-purchase one single plot for a term of ten years which, upon payment of a further administration fee, may be extended for a further period of ten years. Or: Option 2 (iv) (preferred) One plot may be pre-purchased by an individual for their exclusive use. Add: (v) The Customer Services Manager, Greenspace Manager and Greenspace Portfolio holder have the discretion to meet and discuss any concerns over the availability of plots and if necessary temporarily suspend the pre-purchase of cemetery plots.	(ii) The scenario described by the submitter had not been anticipated when drafting the policy. It is considered a reasonable request. (iv) Option 1: To allow single plots to be reserved for ten years with re-validation before expiry of that time. An administration fee is to be considered as part of the annual Plan 2022/23. This was raised during the deliberations. Further consideration needs to be made of: - The impact on fees and charges - The practicality of administration - Consideration as to whether this aligns with the Act which gives 60 years of exclusive use S10(4). A change of this nature would need consultation with the community. This proposal was not part of the draft policy presented for consultation. Option 2: (preferred) allows a pre-purchase option with the additional controls in clause (v). Clause (v) gives the Council the ability to suspend the pre-purchase of plots in circumstances, such as a pandemic, when demand may be extraordinary.
8.2 Right to Erect a Memorial	*New clause (iii)* Where an additional burial is approved, not anticipated at the time of the original memorialisation, a small	Ensures memorialisation can be achieved without changing the original headstone, particularly when space has not been allowed for in the first instance.

Draft clause	Update as a result of submissions	Reasons
	supplementary plaque may be approved (see Appendix 2)	
8.3 Allowable specification iii. No stainless steel, schist, sandstone, limestone, wood…	iii. A monument must not be made of: stainless steel, schist, sandstone, limestone, wood…	Clarification of this clause.
Appendix A Monuments **Single grave headstone (maximum dimensions)** Level base at ground level covers the width of the plot (up to 1200mm single plot). This may be extended marginally to fill a gap between two plots. Maximum of two steps on the level base: 1. Up to 100mm high (width generally 100-200mm shorter than the level base) 2. Up to 75mm high (width generally 100-200mm shorter than the lower step) Headstone maximum 750 mm high x 700 mm wide. **Double grave headstone (maximum dimensions)** Level base at ground level covers the width of the plot (up to 2400mm double plot). This may be extended marginally to fill a gap between two plots. Maximum of two steps on the level base: 1. Up to 100mm high (width generally 100-200mm shorter than the level base) 2. Up to 75mm high (width generally 100-200mm shorter than the lower step) Headstone maximum 750mm high x 800mm wide	i. Single headstone - to have a total height of 1000mm (including headstone and any steps), width 900mm and depth of 150mm ii. Double headstone – to have a total height of 1000mm (including headstone and any steps), width 1000mm and depth of 150mm. iii. The inclusion of feature stones or rocks as the monument will be considered on a case by case basis. iv. Stainless steel and ceramic will not be permitted as materials in the construction of a headstone. Minor fixtures in these materials e.g. photo images, will continue to be allowed v. Supplementary plaques Supplementary plaques must complement the original headstone design and be of a size and position approved by the Council. As a guide, supplementary plaques should be 250-320 (wide) x 100-140 (high). vi. Ashes memorials Standard dimensions	Members discussed the suggested dimensions for single and double headstones and agreed with having a total height, rather than separate heights for first and second steps and the headstone. This allows for more flexibility in the design of memorials.

4.4. The Management Team have reviewed this report and support the recommendations.

5. COMMUNITY VIEWS

5.1. Groups and Organisations

5.1.1. The Funeral Directors, Monumental Masons and contractors working in the District cemeteries have been consulted as the draft policy was developed. They were advised of the consultation and the final draft sent to them for comment. Additionally, feedback provided during consultation on the Cemetery Strategy has been considered.

5.2. Wider Community

5.2.1. Community consultation was undertaken from 15 January to 15 February 2021. People who submitted to the Cemetery Strategy were advised of the consultation and invited to participate.

6. IMPLICATIONS AND RISKS

6.1. Financial Implications

6.1.1. The development of this policy consists mainly of staff time and is managed through current budgets.

6.1.2. The implementation of the policy will not incur additional cost unless S7.2.5 (Option 1) is adopted creating an increased level of service with contact being made with all persons who have pre-purchased plots, every 10 years. Although there is an administrative fee to be collected, the costs associated with this could be significant.

6.1.3. S7.2.5 (Option 2) represents the status quo and can be managed through current budgets.

6.2. Community Implication

6.2.1. The policy formalises the day to day operation of Council-managed cemeteries in the District. This gives clear and consistent information to the community while acknowledging the important role cemeteries play.

6.2.2. Some elements of the policy are more restrictive than has been the case in the past, such as the opportunity to reserve plots and consideration around memorabilia, tributes and adornment.

6.3. Risk Management

6.3.1. The community had the opportunity to comment on the draft policy and present their views formally to the Hearing Panel. The Hearing Panel has taken these views into account before committing the policy for adoption to Council.

6.4. Health and Safety

6.4.1. Health and safety considerations are an integral part of the policy. Cemetery management has potential for health and safety issues to arise. These are mitigated through elements of the policy and workplace health and safety plans of the contractors, Funeral Directors and Monumental Masons.

7. CONTEXT

7.1. Policy

7.1.1. This is not a matter of significance in terms of the Council's Significance and Engagement Policy.

7.2. **Legislation**

7.2.1. Burial and Cremation Act 1964 (Part 1, Establishment, maintenance and regulation of cemeteries)
Reserves Act 1977 (S23)
Health Act 1956 (S25)
Local Government Act 2002 (S125)
Resource Management Act 1991 (S31)
Burial and Cremation (Removal of Monuments and Tablets) Regulations 1967
Cremation Regulations 1973
Health (Burial) Regulations 1946

7.3. **Community Outcomes**

Governance

- Effect is given to the principles of the Treaty of Waitangi
- There are wide ranging opportunities for people to contribute to the decision making that effects our District.

Environment

- There is a safe environment for all
- There is a healthy and sustainable environment for all.

Places and spaces

- The community's cultures, art and heritage are conserved and celebrated
- Public spaces and facilities are plentiful, accessible and high quality
- People are friendly and caring, creating a strong sense of community in our District.

7.4. **Delegations**

7.4.1. Section 13, S-DM 1023 Community and Recreation Committee: Authority to initial a Special Consultative Process or otherwise consult the community within this committee's fields of activities and where the proposed consultation is not contrary to an established Council position.

Waimakariri District Council
215 High Street
Private Bag 1005
Rangiora 7440, New Zealand
Phone 0800 965 468

Draft Cemetery Policy

1. Introduction

Cemeteries play an important role in our society supporting our sense of community and reflecting not only the history of local people and cultures that founded and influenced our District but also the different cultures of today's residents.

Council has a statutory role in providing cemeteries via the *Burial and Cremation Act 1964.*

The Waimakariri District Council manages seven cemeteries. They are well maintained, are peaceful places for family and friends and are open to visitors 365 days a year during daylight hours.

Council cemeteries are available to all persons, not just residents of the District. The Kaiapoi Public Cemetery and Rangiora Lawn Cemetery include Services Cemeteries providing for service personnel

2. Policy context

Council manages seven cemeteries in the District, five of which are open for burial and/or ashes interment. The Sefton Cemetery Reserve is undeveloped and the Kaiapoi Anglican Cemetery accepts burial and ashes interments in reserved plots only.

The population of Waimakariri District has been growing steadily and associated with this are the changing demographics and increasing cultural diversity.

The management of cemeteries needs to meet changes in community expectations and enhance sustainable use of cemetery reserve land.

3. Policy objective

This policy guides the operational procedures for day-to-day cemetery management. This ensures our cemeteries are a safe way to care for our deceased, with standards that protect public health and the environment.

4. Definitions

(the) Act	Means the *Burial and Cremation Act 1964* or any superseding legislation.
Applicant	A person who is not employed as a Funeral Director, and is carrying out functions associated with a funeral.
Authorised person	A person for whom the burial warrant has been issued.
Cemetery	Any land that is purchased or vested in Council, or under control of the Council and held, taken, acquired, set apart, dedicated or reserved, under the provisions of any Act or before the commencement of the

	Burial and Cremation Act 1964, exclusively for the burial of the dead generally, and where the context so permits, includes a closed cemetery within the meaning of the *Burial and Cremation Act 1964* or any other act. This excludes identified Urupa.
Close relative	Grandparent, parent, sibling, child, spouse, civil union partner, de facto partner of the deceased.
Community Greenspace Manager	The Waimakariri District Council staff member employed as the Community Greenspace Manager,
Contractor	Any other authorised contractor working in the cemetery.
Council contractor	The company that has the Greenspace contract for cemetery maintenance.
Council representative	Any individual or Council approved contractor who the Council delegates the authority to act in a specified area.
Disinter or disinterment	The removal of a human body or ash remains from the earth or any vault.
Exclusive right of burial or burial right	A purchased burial plot for the exclusive right to the owner to inter human remains in a burial space. There is no ownership of “real estate” as such.
Funeral Director	A person, who in the course of their business, carries out burials and related matters. This includes a person who holds themselves out as prepared to carry out body preparation for burial or cremation.
Headstone permit	A permit to allow the erection of a headstone, received from Waimakariri District Council, following application on the prescribed form and receipt of the correct fee.
Inter or interment	The placement of a human body or ash remains in a grave or any vault.
Lawn Cemetery	A cemetery which presents a park-like appearance and is laid out in grass with concrete headstone berms.
Manager (Council)	Includes the Waimakariri District Council Manager of Customer Services and/or Manager of Community Greenspace.
Monument	Includes a headstone, plaque, panel or other memorial to a deceased person.
Next of Kin	Close relative, whanau and hapu members, guardian(s), representative or the person named on the Application for Warrant to Inter as the Next of Kin.
Service cemetery	Means any cemetery or part of a cemetery that has been set aside permanently by a local authority for the burial of bodies of persons who have been on operational service in Her Majesty’s Forces and the wives or husbands of, or persons who have lived in a relationship in the nature of marriage with, a person who has been on operational service in Her Majesty’s Forces pursuant to

	Section 15(a) of the *Burial and Cremation Act 1964*.
Service person	A person who has been on operational service in Her Majesty's Forces pursuant to Section 15(a)(i) of the *Burial and Cremation Act 1964*.
Sexton	Any person approved by Council to manage day to day activities of any cemetery and includes his/her assistants.
Urupa	Maori burial ground or cemetery.

5. Policy statement

5.1. Hours of operation

i. Cemeteries are open to visitors all year round

ii. Burials are carried out between the hours:

Monday to Friday - 9.00 am to 3.30 pm (extended to 4.00 pm during daylight saving), excluding public holidays or days that they are observed.

Saturday – 9.00 am to 12.00 pm

iii. Services outside these hours may be undertaken by special arrangement with the Manager. Consideration will be given to the reason for the request and approval will depend on the Council Contractor's availability to prepare the grave and complete the burial safely.

iv. An additional fee may be charged to cover extra costs associated with burials outside the standard hours.

5.2. Safety

i. Vehicles driven in a cemetery must observe the 20 km/h maximum speed limit and comply with all usual public roadway traffic road rules. Vehicles must stay on the roadway or within areas designated for vehicles and give-way to a hearse and funeral procession.

ii. Visitors to the cemeteries must follow any safety instructions of the Council Contractor's representative or Council staff.

iii. Any contractor or person working in the cemeteries must have the permission of Council and an approved Health and Safety Plan.

iv. Prior to a burial the open grave shall be covered over by boards and taped off with security tape. The boards and tape will remain in place until such time as the funeral director is in attendance and takes over responsibility for the security of the open grave.

v. During the burial the Funeral Director is responsible for the safety of the members of the public at the gravesite until the funeral director formally hands the site back to the control of the Council Contractor.

vi. If there is no Funeral Director controlling a burial then the site safety remains in the care of the Council Contractor.

vii. Any persons in attendance or involved in a burial or interment procedure in a Council cemetery must adhere to all directions given by the Council Contractor at all times.

5.3. Fees

i. Fees for plot purchases and interments are set by resolution of the Council and reviewed annually.

ii. There is no additional fee for the interment of non-Waimakariri District residents.

iii. Where application is made to Council for a 'free of charge' burial of any deceased poor person, the application will be accompanied by a certificate signed by a Justice of the Peace in accordance with the *Burial and Cremation Act 1964*. This will certify that the deceased has not left sufficient means to pay the current charge of interment fixed by Council, the cost of burial is not covered by an ACC or WINZ entitlement and that their relatives and friends are unable to meet the cost. Burial will take place in a plot as determined by Council and no headstone will be erected until all fees have been paid.

6. Recognition of religious/cultural requirements

Waimakariri District Council recognises the diversity of the District's community and in particular differing requirements of rites of burial. In recognising these requirements and those prescribed within the *Burial and Cremation Act 1964*, there is scope where requested, to permanently set aside sections of a cemetery for the use of different recognised religious denominations. To help achieve this:

i. Following an official approach from the governing body of a recognised religious denomination (not an individual) and space permitting, the Council may set aside a designated area of a cemetery for the use of a particular religious denomination and establish guidelines for the use of the area.

ii. The religious denomination may (at their own expense, in line with the Act and with express permission from the Waimakariri District Council) fence off the area and introduce signage which conforms with section 11.3 of this policy.

iii. Council will allow the area set aside to be consecreated by the religious denomination according to the rites of that denomination.

iv. These areas will be placed within the existing design of the cemetery.

7. Interments

7.1. Compliance with regulations

Provisions of the *Burial and Cremation Act 1964* and any amendments must be complied with.

7.1.1. Burial bookings

i. Burial applications must be made by completing an "Application for Warrant to Inter" in the name of the rights holder or a person authorised by the rights holder.

ii. Application for a Warrant to Inter should be received at least 2 working days before the intended burial. The minimum notice period may be reduced by agreement with the Customer Services Manager (in consultation with the Council Contractor).

iii. Burials are booked when a confirmation email is sent by the Council to theFuneral Director or applicant.

7.2. Exclusive right to burial

7.2.1. Sale of a Plot

i. When the Council sells a plot it sells an exclusive right of interment in perpetuity.

ii. The person named as the applicant on the Application to Purchase a Cemetery Plot form is considered to be the rights holder. The rights holder has the right to determine what parties may be interred in the plot and to place a headstone on the plot.

iii. No burial or headstone placement can take place in a plot that is already used or allocated without the authority of the rights holder. If the burial rights holder is deceased, the immediate next of kin may give authority, or a person acting on behalf of the deceased's estate can make the application.

iv. Where there is doubt regarding the allocation of a plot, Council may require confirmation that the burial is authorised by the rights holder.

v. Plots are allocated by the Customer Services staff. Where a request is made for a particular plot, agreement to such a request is at the sole discretion of the Customer Services Manager who will endeavour to accommodate such a request providing this does not conflict with effective operational management of the cemetery.

7.2.2. Transfer of an exclusive right of interment to another party

i. The rights holder may transfer the right of interment to another person by completing an 'Application to Vary an Existing Cemetery Deed'.

ii. Where the exclusive right of interment is held jointly and one party dies, the right transfers to the surviving holder.

iii. The holder of an exclusive right of interment may bequeath the Exclusive Right as if it were the holder's personal estate. Evidence in writing of a bequeath is required to be provided to Council prior to amendment of the burial register.

iv. If a person other than a party having the exclusive right of interment seeks interment in the plot the Customer Services Manager may refuse to allow the interment in the plot if there is a doubt about that person's entitlement to burial in that plot.

7.2.3. Surrender of an exclusive right of burial to Council

i. A holder of the Exclusive Right of Interment in any plot in which no burial has taken place, may transfer the plot back to the Council by submitting an Application to Vary Cemetery Deed.

ii. Where the plot is transferred back to the Council a payment will be made to the current rights holder of the amount currently listed in the fees and charges schedule.

7.2.4. Lapse of Right of Interment

i. In accordance with subsection 10(4) of the Act, if no burial has taken place after 60 years from the date of the sale of the exclusive right of interment in a plot, the right lapses and the plot returns to ownership of the Council. The Council shall not be liable for refund of any fees paid where the right of interment has lapsed.

ii. One year prior to a right to interment lapsing the Council will attempt to contact the rights holder regarding renewal of the right of interment.

7.2.5. Pre-Purchasing Plots

i. The allocation of plots is carefully managed to ensure the best use of available cemetery space and resources.

ii. Pre-purchasing plots is permitted at the time of an interment if the spouse of the deceased or parents of a deceased child wish to reserve a plot adjacent to the burial. Or, where a person requests to purchase a vacant plot adjacent to a close relative.

iii. Plot purchase and record fees must be paid at the time of reservation.

iv. Either: (Option 1) Notwithstanding the above, any person may pre-purchase one

single plot for a term of ten years which, upon payment of a further administration fee, may be extended for a further period of ten years.

Or: (Option 2) One plot may be pre-purchased by an individual for their exclusive use.

v. The Customer Services Manager, Greenspace Manager and Greenspace Portfolio holder have the discretion to meet and discuss any concerns over the availability of plots and if necessary temporarily suspend the pre-purchase of cemetery plots.

7.2.6. Ashes Plots

i. Clauses 7.2.1 to 7.2.5 also apply to ashes plots.
ii. In the older section of the Oxford Public Cemetery a maximum of four ashes burials is permitted in a plot (Rows OOX010A and OOXLAAA) in all other areas a maximum of two ashes burials is permitted per plot.
iii. Ashes may not be interred in a burial plot unless there has already been a burial in that plot, or a future burial is reserved for that plot. A maximum of two ashes burials is permitted in a burial plot.
iv. Prior to ashes being interred in a plot where the deceased does not hold an Exclusive Right of Interment, the written permission of the owner of the plot must be provided to the Council.
v. Due to space constraints it is not permitted to purchase a new burial plot for the sole purpose of ashes burials.
vi. The burial of pet animals either as ashes or as a body is not permitted in a Council cemetery unless placed in a sealed casket with the deceased.
vii. The scattering of ashes is not permitted in any of the Council's cemeteries, parks or reserves due to health and safety reasons.

7.2.7. Services Cemeteries

i. Services Cemeteries are available at the Rangiora Lawn Cemetery and the Kaiapoi Public Cemetery.
ii. Interment in the Services Cemetery is limited to veterans who have had "Operational Service" under the *Burial and Cremation Act 1964*. Details of the Operational Service must be included on the Application for Warrant to Inter.
iii. The spouse of a qualifying veteran may be interred in the Services Cemetery after the interment of the qualifying veteran providing the first interment is at double depth.
iv. The Council will on application consider the interment of the spouse prior to the death of the qualifying veteran. Approval is at the discretion of the Manager.
v. Children cannot be interred in a Services Cemetery unless they are eligible for interment in the Service area in their own right.

7.2.8. Grave Preparation

i. Only properly qualified staff of the Council's contractor are permitted to dig a grave for a full burial or ashes interment in any part of the cemetery.
ii. Family members of the deceased may fill in an ashes grave.
iii. Requests for family members of the deceased to partially fill in a grave (to the level of the casket lid) after a full burial may be made at the time of booking if time will allow completion of this within the operating hours of the cemetery.
iv. Acceptance of special arrangements, including filling of the grave, is at the discretion of the Manager in consultation with the Council Contractor.

v. The following specialty equipment is not provided by the Council:
- Grave mats
- Tapes or lowering device
- Lowering device stand
- Boards and bearers
- Dirt box and trowel
- Special items to meet cultural requirements.

7.2.9. Burial Attendant

i. The Council Contractor will provide a representative on site for the duration of the burial.

ii. The role of the Council Contractor's representative is to
- Meet the funeral director and funeral party
- Brief the funeral director about technical site issues
- Assist with loading and lowering of the casket by prior arrangement
- Responsibility for safety of the grave site before the service and burial, and again when the ceremony is complete.

iii. The Funeral Director is responsible for moving the mourners away from the grave site after the burial to allow access for the contractor's machinery to fill in the grave.

7.2.10. Grave Maintenance

i. **Grave reinstatement**

Graves are reinstated as soon as practicable after the burial has taken place. This involves back filling the grave, compacting and re-sowing. In some sites the grave may need to be back-filled up to a year after the burial.

Planting or placement of other items is not permitted on any of the grass areas of the cemetery as the area is established as mown grass turf following an interment.

ii. **Maintenance of Graves**

The Council Contractor maintains all plots at the cemeteries. Maintenance of any memorial is the responsibility of the next of kin or family of the deceased, however a permit must be obtained prior to any work, other than simple cleaning, being carried out.

iii. **Grave re-use**

Double depth interments are permitted in some Council cemeteries. Information on where double depth interments may occur is available at waimakariri.govt.nz

Where a second or subsequent interment takes place, only properly qualified staff employed by the Council's contractor or a monumental mason (with a permit) can break any concrete on graves with a concrete covering. The Community Greenspace Manager retains the right to refuse to allow the breaking of such concrete. It is the sole responsibility of the owner or their representative to reinstate the concrete covering of the grave after the burial and the reinstated cover must comply in all respects with the cemetery monumental specifications.

iv. **Grave testing (probe**)

Where there is doubt about whether an original burial was at double depth, the Council may agree to test graves in order to ascertain whether there is room for a subsequent interment. A charge may apply for this service.

Testing by probe is not always conclusive, particularly in stony ground. An alternative burial site must be nominated where there is any doubt regarding the depth of a previous burial.

The Manager may refuse to allow a second burial in any plot where there is doubt about the depth of the first burial.

7.2.11. Burials not managed by a funeral director

i. Where a burial is being arranged by a person other than a professional funeral director, the Council will require additional information prior to approving a Warrant to Inter.

This will include –

- details of the person who will be responsible for the grave site during the burial
- evidence of death certified by a Registered Medical Practitioner
- any special services required for the burial.

ii. Payment of the interment fee is required at the time of the application for the burial warrant and additional costs may apply if the Council Contractor is required to engage extra staff to manage the burial.

8. Erection and maintenance of monuments, headstones, structures etc

8.1. Temporary Grave Markers

The Council does not provide temporary grave markers. Funeral directors may provide temporary markers in the form of a cross (up to 500mm height) for a period of up to one year prior to a permanent memorial being placed.

8.2. Right to Erect a Memorial

i. The owner of the exclusive right of interment, or if the owner is deceased, the next of kin or executor of the Deceased's Estate can authorise the erection of a memorial plaque or headstone or an additional inscription to be added to an existing monument.

ii. One headstone or memorial per plot is permitted, to be placed on the grave in a position approved by Council. If subsequent burials are anticipated in the plot, allowance should be made on the memorial for their details.

iii. Where an additional burial is approved, not anticipated at the time of the original memorialisation, a small supplimentary plaque may be approved. See Appendix 2.

iv. A Veterans Affairs plaque may be installed next to a headstone of a qualifying veteran interred in areas of the cemetery outside the services cemetery area if space allows.

v. In the Services areas a standard memorial plaque or headstone, depending on the cemetery, is available at a subsidised rate through Veterans Affairs. These memorials are uniform in style with no provision for personal messages or photographs.

8.3. Allowable Specification

8.3.1. New Zealand Standard

Headstones and memorials will meet the minimum structure design criteria and requirements of the NZ Standard for Headstones and cemetery monuments NZS 4242:2018.

8.3.2. Memorial size and type

i. Permitted maximum dimensions for headstones in the full burial sections of the cemetery are set out in Appendix 2. The dimensions for memorials in the ashes sections may vary due to the cemetery location. Information is available from Customer Services

ii. A monument must be made of a natural, durable material that is non-absorbant and does not require a rigorous cleaning regime to maintain its appearance, or be subject to breakage, cracking or shattering (granite, bronze or other non-ferrous metal or similar suitable material). Council approval prior to the installation of the monument is required.

iii. A monument must not be made of: stainless steel, schist, sandstone, limestone, wood, fibreglass, ceramic, plastic, glass or other unsuitable material.

iv. No concrete work is to be painted or colour tinted.

8.3.3. Placement of memorials

i. Where appropriate, the Council will provide concrete beams for headstones to be installed on. The placement of memorials must not encroach on the concrete mowing strip.

ii. Memorials will be centred on the plot and in line with other memorials in the same row. A shared memorial may be centred over two plots.

8.3.4. Memorial details

i. Messages on a memorial that could be offensive to other cemetery users will not be approved.

ii. No inscription (including photographs, images or text) is permitted on the reverse side of the memorial.

8.4. *Permit Required*

8.4.1. No memorial plaque or headstone may be erected, placed or removed from a cemetery without first applying for and obtaining a Memorial Permit from the Council. Applications are to be made on form QS-M301-AG with all sections of the form, including accurate measurements and the full inscription fully completed.

8.4.2. Council may request the removal of any memorial or plaque installed without a permit or that does not meet the permitted dimensions.

8.5. *Installation of Memorial*

Memorials or headstones must be installed by an approved Monumental Mason or Stone Mason. Installation by other qualified persons is at the discretion of the Community Greenspace Manager.

8.6. *Removal of Memorial*

No person shall without the prior written authority of the Council remove any Memorial from any grave, plot or other area of a cemetery.

8.7. *Responsibility for Maintenance*

The holder of the Exclusive Right of Interment, or if the holder is deceased, the immediate next of kin, is responsible for maintaining the memorial plaque or headstone in good order and condition.

8.8. *Responsibility for Damage*

The Council does not accept any responsibility for damage or vandalism to monuments unless such damage is the direct result of proven negligence by the Council's contractor.

8.9. *Memorial Seats*

i. Requests for the erection of a memorial seat in any cemetery must be made in writing to the Council. Written approval from Council will be required before a memorial seat is erected in any cemetery.

ii. All memorial seats are gifted to the Council and form part of the Council's assets and will be maintained to the Council's specification. Seats may be removed or moved as required to meet the future needs of the cemetery.

8.10. *Memorabilia, Tributes and Adornments*

i. Wreaths and other floral tributes or ornaments not permanently fixed to the monument may be placed on the plot for a period of ten days following the interment. After ten days items must be removed or relocated to the concrete beam or area directly infront of the headstone.

ii. Memorabilia may be left within the area of the monument directly in front of the headstone.

iii. Any adornments that encroach on the mowing strip and obstruct or impede

burials, grass maintenance or other cemetery operations will be removed.

iv. To maintain a cemetery environment for the benefit of all users, grave memorabilia that does not comply with cemetery standards will be removed by the Manager or their representative.

v. If there is an approved concrete kerb around the grave the inner area may contain tributes providing they do not cause hazards, safety or maintenance issues and are not considered offensive to visitors or families of neighbouring graves.

8.10.1. Full adornment of plots

i. Full adornment of plots such as grave gardens or other structures on the lawn area of a plot, either of a permanent or temporary nature are not allowed in any cemetery as they obstruct and impede the operation and maintenance of the cemetery. The Council will remove any such adornments without notice if necessary to facilitate a burial or if they are deemed a health and safety risk.

ii. Where possible prior to removal, the Council will attempt to contact the plot owner and request the owner remove such adornments. If the Council is unable to contact the plot owner or after making contact the owner has not complied with the request, the Council will remove the adornments and hold them for a period of 30 days, after which they will be disposed of. The owner of the plot will be charged for any removal costs, disposal fees and any plot remediation costs incurred by Council.

iii. Additional information on suitable memorabilia is included in Appendix 1

9. Disinterment

9.1. Disinterment of graves

i. Disinterments shall be conducted according to Sections 51 and 55 of the Burial and Cremations Act 1964.

ii. A disinterment licence issued by the Ministry of Health, via the Canterbury District Health Board must accompany an application for disinterment. A minimum of 10 working days is required for the processing of an application for disinterment.

iii. Disinterments are controlled by the Community Greenspace Manager who will arrange a suitable time for the exhumation in liaison with the Ministry of Health's Health Protection Officer.

iv. Requests for a representative of the family of the deceased to attend the disinterment must be made at the time of application. The name of the representative and relationship to the deceased must be provided.

v. All decisions relating to the conduct of the disinterment are at the absolute discretion of the Manager who must be mindful of the impact of any requests on other users of the cemetery and on staff.

vi. The full costs associated with the Disinterment are met by the applicant.

9.2. Disinterment of Ashes

i. An application is required to disinter ashes from a Council cemetery.

ii. Applications for the disinterment of ashes must be on the form "Application to Remove Ashes from a Waimakariri Cemetery" signed by surviving close family members.

iii. Disinterment of Ashes is carried out by the Council's Contractor.

10. Cemetery records

10.1. *Information integrity*

i. Information is sourced from Council records, including historic records. Every effort has been made to ensure the accuracy of records although there may be errors and omissions present.

ii. Corrections provided to the Council will be verified and amended.

10.2. *Information access*

i. Cemetery records for Waimakariri District Council owned and managed cemeteries are available online at waimakariri.govt.nz.

ii. Assistance to locate graves is available from Customer Services Staff.

11. Cemetery maintenance

11.1. *Shrubs and trees*

i. Maintenance of lawn areas, trees and vegetation, roadways and paths adjacent to and within the monumental sections is the responsibility of the Council. All shrubs, plants etc in the cemetery and gardens are planted and cared for by Council. Council may remove any trees, shrubs or other vegetation from the cemetery.

ii. The public are not permitted to plant flowers, shrubs, or trees in any area within the cemetery boundary without Council's written consent. Council may remove any trees, shrubs, or other vegetation that have been planted on a burial site or within the Cemetery without first having obtained the prior permission of Council.

11.2 *Monuments and structures*

i. Council is not responsible for the erection, upkeep, maintenance, repair, restoration or cleaning of any monument or structure at a burial site.

ii. Council will endeavour to contact any known family member if damage is caused to a grave monument.

iii. Council may remove any structure in a cemetery that has become dilapidated, unsightly, is crumbling, or deemed to be unsafe in a risk assessment carried out by Council. Council's actions will be limited to making unsafe structures safe to ensure public and employee safety.

11.3 *Signage*

Installation and maintenance of signage is the responsibility of the Council.

12. Ceding of cemeteries to Council

A cemetery manager/organisation may approach the Council to take over ownership/management of a cemetery. Agreement should be met by both parties with regard to:

- Future use of the cemetery, should it continue or be closed. This could depend on the proximity of other Council managed cemeteries
- Future of any (private) land set aside for cemetery but not yet used for burials
- Level of future maintenance of the cemetery
- Future of any unstable/unsafe memorials
- Number of reserved plots, and records of purchaser and right of burial
- Condition of records and transferring records to Council
- The amount of any financial contribution to be transferred to the Council to meet

the cost of taking over the cemetery.

We consider a financial contribution, for ongoing maintenance and/or repairs, is warranted to ensure the cost of taking over cemeteries is not a burden on the District's ratepayers. The contribution is set to meet some of the future maintenance costs, the cost of making safe or documenting and removing unstable memorials and the cost of transferring records into the current format of Council cemetery records.

Transferring control of a cemetery to Council does not mean the future of the cemetery is guaranteed. Councils reserves the right to review the needs of their community and the ability to close cemeteries that are no longer required.

13. Links to legislation, other policies and community outcomes

Burial and Cremation Act 1964

Reserves Act 1977

Health Act 1956

Local Government Act 2002

Resource Management Act 1991

Burial and Cremation (Removal of Monuments and Tablets) Regulations 1967

Cremation Regulations 1973

Health (Burial) Regulations 1946

Waimakariri Cemetery Strategy 2020

Waimakariri District Council Corporate Sustatainability Strategy 2019

14. Community Outcomes

Governance

a. There are wide ranging opportunities for people to contribute to the decision making that effects our District.

Environment

b. There is a safe environment for all

c. There is a healthy and sustainable environment for all.

Places and spaces

d. The community's cultures, art and heritage are conserved and celebrated

e. Public spaces and facilities are plentiful, accessible and high quality

f. People are friendly and caring, creating a strong sense of community in our District.

15. Adopted by

Council on Day/Month/Year

16. Review

Review every six years or sooner on request.

APPENDIX

1. Memorabilia

To maintain peaceful and reflective spaces that are sustainabile and sensitive to all cemetery users, the Council encourages visitors to limit the use of plastic and select tributes made of natural materials.

- Plastic flowers should be secured in a container so they are not blown onto the grass areas by the wind.
- Removable shiny objects that may be harmful to birdlife should not be left at the cemetery.
- Vegetation of any kind should not be planted on the plot areas of the cemetery. Limited planting in the ashes gardens may be permitted.
- Glass, crockery or other breakable ornaments including solar lights are not permitted.
- Alcohol, alcohol containers or illegal drugs or paraphinalia should not be left at the cemetery.
- Toys or tributes that have perished or become shabby in appearance should be removed.

APPENDIX

2. Maximum permitted dimensions for burial headstones

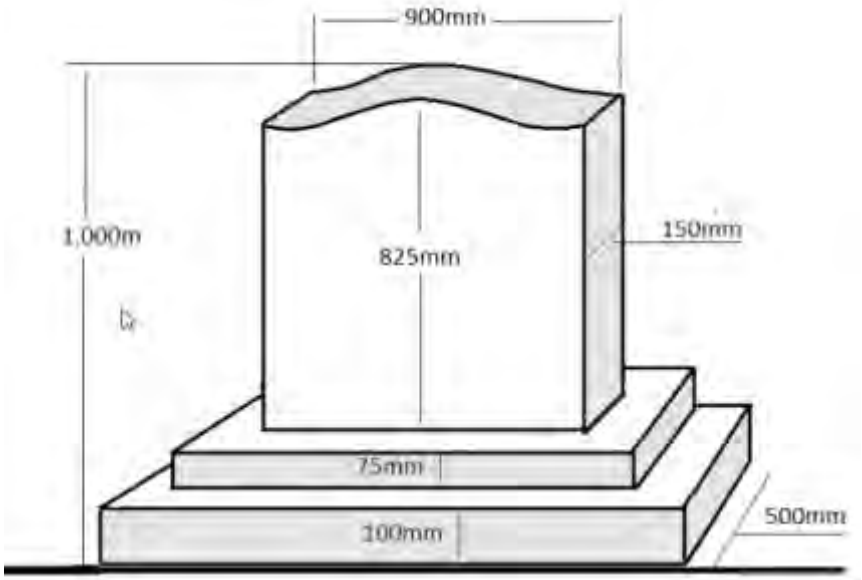

Single Standard Headstone

Example of a single grave headstone

i. Single headstone – to have a total height of 1,000 mm (including headstone and any

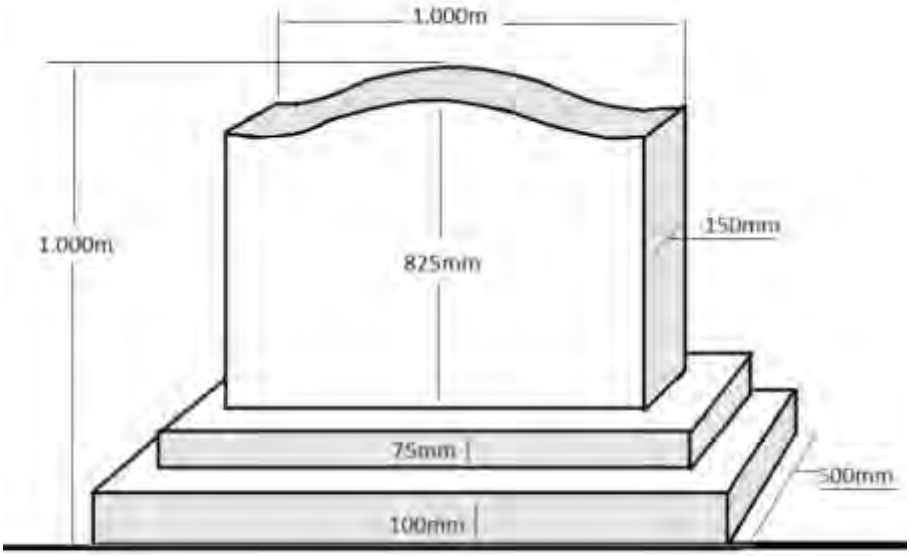

Double Standard Headstone

steps), width 900 mm and depth of 150 mm.

ii. Double headstone – to have a total height of 1,000 mm (, including headstone and any steps), width 1,000 mm and depth of 150 mm.

iii. The inclusion of feature stones or rocks as the monument will be considered on a case by case basis.

iv. Stainless steel and ceramic will not be permitted as materials in the construction of a headstone. Minor fixtures in these materials, e.g. photographic images, will continue to be allowed.

Supplimentary Plaques

Supplimentary plaques must complement the original headstone design and be of a size and position approved by the Council. As a guide, supplimentary plaques should be 250-320 (wide) x 100-140 (high).

Ashes memorials

Standard dimensions

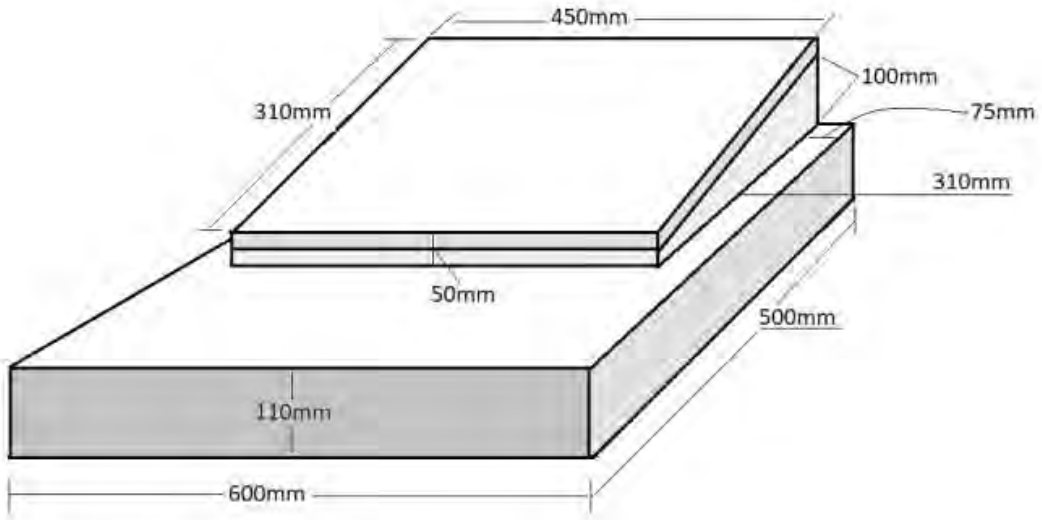
450mm
100mm
75mm
310mm
310mm
50mm
500mm
110mm
600mm

WAIMAKARIRI DISTRICT COUNCIL

MINUTES OF THE HEARING AND DELIBERATIONS OF THE DRAFT CEMETERY POLICY HELD IN THE WOODEND COMMUNITY CENTRE, SCHOOL ROAD, WOODEND ON WEDNESDAY 3 MARCH 2021 WHICH COMMENCED AT 9.00AM AND RECONVENED FOR FURTHER DELIBERATIONS ON THURSDAY 18 MARCH 2021 COMMENCING AT 11.30AM IN THE UPSTAIRS MEETING ROOM, RUATANIWHA KAIAPOI CIVIC CENTRE, 176 WILLIAMS STREET, KAIAPOI

PRESENT (both 3 March and 18 March 2021)

Councillors R Brine, W Doody and P Redmond

IN ATTENDANCE

L Beckingsale (Policy Analyst) (present on Wednesday 3 March only), M Harris (Customer Service Manager), G MacLeod (Community Greenspace Manager), G Reburn (Parks and Recreation Operations Team Leader), K Johnson (Customer Services Officer) A Smith (Governance Coordinator)

1. APPOINT A HEARING PANEL CHAIRPERSON

A Smith opened the hearing and called for nominations for a Chairperson for the Hearing Panel.

Moved Councillor Doody Seconded Councillor Redmond

THAT Councillor Brine be appointed as Chairperson of the Draft Cemetery Policy Hearing Panel.

CARRIED

2. APOLOGIES

There were no apologies

3. CONFLICTS OF INTEREST

There were no conflicts of interest recorded.

4. HEARING OF SUBMISSIONS

9:10am Decra Art Ltd (Adam Julian)

A Julian tabled, and spoke to, a copy of additional information to his original submission, which included several photos of memorials. Decra Art Ltd is a member of the NZ Master Monumental Association and Mr Julian is currently on the executive and is past President. Decra Art Ltd manufacture, retail and install monuments in Canterbury but are also New Zealand's only manufacturing wholesaler and supply monuments to almost every retailer in New Zealand. Mr Julian commented on the changing and diverse demographics of the population in Waimakariri and suggested that if the Council tightened up people's choices and enforced conformity, it will not be meeting the needs of its residents. The way memorials look now is moving away from traditional looks – Decra Art supply 95% of New Zealand monumental masons with their memorials and have a good understanding of the needs of most international communities and varying religious based needs. This submission supports the Council's Cemetery Policy with

some small changes suggested, relating to memorials and how they are constructed, and meeting the different needs of families and help to meet the needs of this growing community. Reference was made to photos included in the tabled information of different types of monuments, some with more than one structure where there is further ashes interred in the plot. In Waimakariri it is allowed to have two additional ashes interred in a plot – making a total of three. It was noted that in other cemeteries (different districts, private cemeteries?) allow four additional ashes.

Referring to the installation of monuments (Section 8.5 of the Policy), the Master Monumental Stonemasons Association guarantees all installations of all its members, who must follow very stringent installation rules and the Association has standards that have to be met. Mr Julian suggested this section could allow for people to install monuments who do not have the expertise to do so or the necessary information to do so safely. The question was raised if the Council's Community Greenspace Manager had discretion for other qualified persons to undertake installations, how would the Manager know they were "qualified".

The main concern of this submission was the size of headstones, A Julian noted that some people buy headstones on line. Some people may not realise that they need to apply for a consent from the Council first to install a headstone. A Julian questioned having tight restrictions on the headstone sizes for double plots noting that families have paid for two plots. If a headstone is only 900cm wide there is a lot of space left blank. There is space for another plaque to be added for any ashes internments and this is reasonable.

A Julian suggested having a standard set in place for Waimakariri that fits with the rest of the country. Regarding using boulders as headstones, any boulders that are used in place of headstones are inspected by Decra Art before installation. Safety is the intention here, the wider they are, the safer they are, as long as they are structurally sound. It was pointed out that people have different expectations of what they would like to have as a headstone, but A Julian supports having standard regulations for the whole district, without too many restrictions. Some private cemeteries have no restrictions on the size of headstone.

A Julian would like to assist the Council with headstone sizing and to make sure that the majority of needs of the community are met without too many restrictions.

Questions

Councillor Doody – where are the boulders imported from – A Julian advised they are granite boulders imported and it is expected that they would last 200 – 300 years or longer. Provided explanation one how the headstones are fixed to the base. These are fixed very safely with the dowels that are used, noting that these survived the Canterbury earthquakes.

Council Redmond – referred to comment that one size doesn't fit all. A Julian responded that most monuments are upright standing, though this may have originally been a Lawn Cemetery. There is a height restriction of 800mm. Families need to use the services of Monumental Masons to install headstones and know that they will adhere to the size requirements. Noted that there are no double headstones allowed at Rangiora Lawn Cemetery and would support this changing, as some families will prefer to use another cemetery because of this restriction.

Councillor Redmond noted one of the photos tabled was of a stainless steel headstone. These were not recommended by A Julian as these would not have long lifespan before corroding.

On the height restriction, A Julian does not believe there needs to be a limit set on the height of a base.

How does this draft Policy compare with other regions? – A Julian said this is very good, but would like a few small changes. Cemeteries need to be safe and beautiful, without too many restrictions. This is an opportunity to come up with an answer for this Policy.

Following a question from Councillor Redmond on the wording that is put on a headstone,

M Harris (Customer Service Manager) said the Council asks for the wording that is going to be on the headstone as part of the permit application.

Kaiaipoi RSA (Neill Price)

N Price spoke to his submission, noting that the Council's Policy is required to align with the Governments Burial and Cremations Act. Noted that there are different regulations on where members of the services can be buried and unless members of the services have been on active duty overseas, they cannot be buried in the RSA section of a cemetery. This is the same situation nationally. The Kaiapoi RSA submission asks that the Council gives consideration to members of the defence force being allowed to be buried in the Services section of Waimakariri cemeteries, whether they have served in New Zealand, or overseas on active duty, operational or on peace keeping duties. Their time in the force needs to be taken into consideration and many New Zealand servicemen and women are involved in overseas peace keeping duties. As an alternative, N Price asked if consideration could be given to having a wall built to take the names of people, so that the veteran and the family can feel part of that RSA section. Mention was made of the wall in the Kaiapoi Memorial Park that the RSA has plaques on this of the different eras of the Kaiapoi RSA. N Price acknowledged the good relationship that the Kaiapoi RSA has with the Council and the support given to the Club.

Councillor Doody sought clarification on peace keeping mission and operational time.
N Price noted that there is a fine line between the two, but any time a defence force member is deployed overseas on duty, whether it be on peace keeping, or operational, there is the same standards of behaviour required. N Price suggests this is where the difficulty lies with having to separate out between the different form of service that is undertaken and the eligibility of those to be buried in the Services sections of cemeteries.

Councillor Redmond sought clarification from N Price that the sections separate in cemeteries are Services sections, not RSA sections. N Price responded that there is an RSA section, but there is an arrangement with the RSA, Police and Fire where these services are often combined together. Councillor Redmond sought confirmation and this was confirmed by staff, that the Council cemeteries are required to be operated within the legislation of the Burials and Cremations Act. The Government is still working on the recent review of this Act. N Price would like to see any member of the armed forces to get the same honour bestowed on them and would like to see the same respect shown to all.

The hearing was adjourned at 10am and reconvened at 10.20am.

5. STAFF MEMO

5.1. Draft Cemetery Policy – Hearing and Deliberations – Lynley Beckingsale (Policy Analyst)

L Beckingsale's memo provided an overview of the consultation process undertaken and the submission received. Ten submissions were received, with two submitters electing to speak to their submission at the hearing today.

6. HEARING PANEL DELIBERATIONS

6.1. Summary of submissions and officer recommendations

DEFINITIONS

Discussion. There was discussion on use of the term Funeral Director being included in the Policy. M Harris commented that there are definite functions that a Funeral Director can perform and if somebody who is not a trained professional is managing a burial that the Council staff and contractor would need to do additional work.

Submission by Mr Paul Starling
Submission by Mr Harold Burson

Officer Recommendations:
Reasons: The term Funeral Director used in the Policy refers to the trained professional. There are responsibilities in the Policy, particularly where the safety of visitors to the cemetery are concerned, that will not be allocated to members of the public.
Where functions may be carried out either by a trained professional or a member of the public, the term Applicant will be used.
The definitions for Contractor, Council Contractor, and Community Greenspace Manager will be added. The definition of Council representative will be updated to exclude the Council Contractor.
Staff Recommendation to Hearing Panel: Where the term Funeral Director is used in conjunction with functions that could be carried out by members of the general public, the term will be changed to Applicant.
The term Funeral Director will continue to be used in conjunction with responsibilities assigned to a person employed in that professional occupation.
The definitions of Applicant, Contractor, Council Contractor and Community Greenspace Manager will be updated in the Policy, and the content of the Policy will be updated to reflect these changes.

RECOGNITION OF RELIGIOUS/CULTURAL REQUIREMENTS

Submission by Ms Pamela Dwyer

Discussion. It was noted that there has not been a lot of enquiries or demand for eco-funerals in the past in Waimakariri. G MacLeod advised that further information is being sourced on eco-funerals and cultural sensitivity needs to be taken into account with this form of burials, and relating to what the water table is close by, because the bodies are buried quite shallow. There would need to be education provided to the public on this and there has not been a lot of demand for this to date, either through the Council's Customer Service team or the Greenspace team. An eco burial generally would be a shallow burial with a tree planting and a much more naturalised area. There would need to be some enquiries made on these burials and how bodies are treated. There is generally no headstone in an eco-burial, with people leaving as little footprint as possible. There needs to be consideration given to what happens when the tree is no longer there.

Officer Recommendations:
Reasons: Greenspace staff need to link in with fellow parks teams at Christchurch City Council and Nelson City Council to understand how they are operating the eco burials and also what requirements these have. At the present time we do not know enough to designate an area within our cemetery network for this, however linking in with those Council's will enable staff to properly report back on this and look at this for when the policy is updated or reviewed.
Staff Recommendation to Hearing Panel: Council Officers to continue talking with the operational teams at CCC and also open talks with Nelson City Council.
Gain feedback on how they are managing eco burials and what requirements there are for this operation.
Utilise this information to guide updates to the policy, noting we need to investigate this further prior to introducing into our district.

Staff will need to work with the Christchurch City Council and Nelson City Council to understand how the eco-burial sites work and how we can integrate this into our cemetery policy in the future.

PRE-PURCHASING PLOTS

Submission by Miss Claire Ward

Discussion: The moratorium on pre-purchasing plots was introduced during the Covid-19 Level 4 Lockdown during 2020 and is retained currently by the Council Staff recommend that this be

continued until consideration of fees as part of the Long Term Plan. There would then need to be a decision made on reserving plots in the future.

Councillor Brine asked how many queries on reserving plots had been received and staff advised that there had not been many enquiries. Staff advised that people are aware that there is a hold on reserving plots. The Council will need to decide if the rules will be changed on this matter, or whether the situation returned to opening up for prepurchasing of plots.

Regarding this submission, the staff recommendation is that pre-purchasing is permitted where the request is to purchase a plot adjacent to a close relative (including parents) which is considered reasonable.

The Hearing Panel agreed with the response to this submission and the broadening of the definitions so the submitter is included but the Policy is whether people can pre-purchase or not which a second issue to be addressed. Staff noted that pre-purchasing does take up a lot of space. G MacLeod spoke on the matter of the pre-purchase is the selling of a piece of real estate and the Council needs to ensure that it has the land and asset available going into the future. There is also the matter of further funding required for berm maintenance and development money. Regarding neighbouring Councils, G MacLeod advised that in Christchurch City, demand has got close to outstripping supply because people are reserving plots, but information is not known at this time from Hurunui or Selwyn District Council. This information will be sourced from these councils.

There was discussion on the issue of people who pre-purchasing a plot then move away from the district and ultimately don't use the plot. After 60 years, ownership of the pre-purchased plots that are unused, reverts back to the Council. Council would need to be quite thorough in contacting people before taking ownership back of any plots. There would need to be proof that the Council had undertaken all available sources of information to locate the purchaser of the plot or family members.

Councillor Redmond said he would find it helpful to know what the situation is with pre purchasing plots in Christchurch City Council, Selwyn District Council and Hurunui District Council. It was confirmed that this information will be sourced and made available to the hearing panel.

The hearing panel agreed with the staff recommendation for C Ward.

Officer Recommendations:
Reasons: Reservation of plots results in capacity being taken up before it is needed. This impacts on budgets when additional berms and ashes gardens are required to be funded to meet the demand of reserved plots The Council has a number of reserved plots that have not been used. In some cases people will have left the district and made other burial arrangements. These plots will return to Council ownership after 60 years.
The moratorium on plot purchase started in response to the Level 4 lock-down. At the time is was not known what the impact of the pandemic would be on Council's cemetery capacity. The moratorium was continued by Council resolution prior to consideration of the Cemetery Strategy and Policy to avoid any rapid increase in plot purchases due to the new policy and strategy. The Council could consider extending the moratorium in light of the proposed fee increases in the draft Long Term Plan.
The Policy allows for pre-purchasing a plot by the spouse of a deceased person or parents of a deceased child at the time of the burial. This could be extended to allow the reservation of a vacant plot next to a close relative.
Close relative is defined in the draft Policy as a grandparent, parent, sibling, child, spouse, civil union partner, de-facto partner of the deceased.
Staff Recommendation to Hearing Panel: Restrictions on pre-purchasing plots remain. Clause 7.2.5 ii is amended to read:
ii Pre-purchasing plots is permitted at the time of an interment if the spouse of the deceased or parents of a deceased child wish to reserve a plot adjacent to the burial; or where a person requests to purchase a vacant plot adjacent to a close relative.

SERVICES CEMETERIES

It was noted that the Council is governed by Veterans Affairs on this matter through national legislation. It was noted that the area in Kaiapoi Cemetery is a Services Section, not an RSA Section. If a Wall of Memories was introduced into the Kaiapoi Cemetery there would need to be some form of agreement reached as to how the wall was managed. It was agreed that the Kaiapoi RSA submit to the Councils Long Term Plan on this matter.

It was agreed that there needs clarification whether the Wall of Memories would be the plaques on the wall or would include internment of ashes as well.

Submission by Kaiapoi RSA

Officer Recommendations:
Reasons: The qualification for interment in a Services Cemetery is set in legislation and the Council has no discretion to make exceptions. Services cemeteries are sometimes referred to as RSA cemeteries or RSA plots which can lead to confusion regarding eligibility.
The RSA could make a submission to the Draft Long Term Plan regarding provision of a Wall of Memories if it thought the idea had merit. Eligibility would need to be clearly defined to avoid a similar situation to that described in the submission.
Greater clarification and understanding of the qualification criteria for interment in a services cemetery may reduce the disappointment of grieving families.
Staff Recommendation to Hearing Panel: That Council staff work with the RSA to ensure the qualification for interment in a Services Cemetery is more widely understood among their membership to avoid disappointment to grieving families.
That the Kaiapoi RSA be invited to make a submission to the Long Term Plan regarding the provision of a Wall of Memories, outlining their thoughts on who would qualify for inclusion, and what they would see as the level of demand for such a facility.

It was confirmed that the Kaiapoi RSA Club has made a submission to the review of the Burial and Cremation Act on the matter of who can be buried in a services section of a cemetery. It was noted that there is some inconsistencies which this Council cannot resolve.

RIGHT TO ERECT A MEMORIAL

Submission by Decra Art Ltd

Officer Recommendations:
Reasons: The submissions suggests a mirrored design for monuments in regards to offering a definition for what constitutes one memorial. We may be able to add further wording into this section that details what a monument can be from a shared perspective.
Staff Recommendation to Hearing Panel: 8.3.3 states that a shared memorial may be centred over two plots. This may allow for a mirrored design as described in the submission. So long as any design meets the requirements as set out in section 8.3 then the monument design will be allowable.

ALLOWABLE SPECIFICATION (MEMORIALS)

Submission by Decra Art Ltd

Officer Recommendations:
Reasons: Defining permitted memorial dimensions will make it easier for customers to understand the type and size memorial they can install. Some flexibility is allowed with the number and size of steps provided the total height does not exceed the maximum permitted.
More work could be done on Appendix 2 so that it is clearer to customers what is permitted. Once the memorial types and sizes are agreed, these will be publicised and made available to Monumental Masons.

Staff Recommendation to Hearing Panel: Appendix 2 Maximum permitted dimensions for burial headstones be held over to allow staff to do more investigation on standard burial sizes with a view to compiling a more comprehensive guide to memorials for the various areas in Council cemeteries.

NEW ZEALAND STANDARD

Discussion; M Harris noted that the real benefit of having this Policy will allow guidance for staff which is something that has been missing up until now. By putting more time into this matter, will allow time to look at different parts of cemeteries that might require different measurements and having more specific information for these different sites. M Harris commented that it would be beneficial to have some brochures available for the public which would advise what was available to be handed out and also on the website. Applications also take into account the respect of other users of the cemeteries. For applications received now, staff are looking at the overall height. There is information on the Christchurch City Council on this matter. The New Zealand Standard deals mostly with structural matters.

L Beckingsale advised that there can be a clause in the Policy that appendixes can be edited or small changes made, by a resolution of Council rather than going through another special consultative procedure. The Policy itself will go to Council where any adjustments can be made.

Submission by Decra Art Ltd

Officer Recommendations:
Reasons: Maximum monument dimensions are required to be fair to all cemetery users. It can be upsetting for those who select a smaller memorial to find something much larger is subsequently installed on the plot beside or directly behind.
There are also varying memorial types in different cemeteries and different parts of a cemetery. More work can be done in defining memorial sizes and types, and publicising what is permitted.
Staff Recommendation to Hearing Panel: Appendix 2 Maximum permitted dimensions for burial headstones be held over to allow staff to do more investigation on standard burial sizes with a view to compiling a more comprehensive guide to memorials for the various areas in Council cemeteries.

MEMORIAL SIZE AND TYPE

Submission by Canterbury Monuments

Officer Recommendations:
Pending: Cemetery.8.1

MEMORIAL DETAILS

Submission by Canterbury Monuments

Officer Recommendations:
Reasons: Feature stones have been installed at the cemeteries as memorials in the past and it is intended that these continue to be allowed as long as the stone is durable, has no signs of cracking and meets the size dimensions.
Stones sourced by family members do not always meet these criteria and there can be disappointment when these are not approved.
Once memorial standards are approved, customer information material will be reviewed and updated.
Staff Recommendation to Hearing Panel: Appendix 2 Maximum permitted dimensions for burial headstones be held over to allow staff to do more investigation on standard memorial sizes with a view to compiling a more comprehensive guide to memorials for the various areas in Council cemeteries.

MEMORABILIA, TRIBUTES AND ADORNMENTS

Submission by Ms Roz Winter

Officer Recommendations:
Reasons: The draft Policy meets the requirements of the submitter.
Section 8.10 and Appendix 1 require tributes and memorabilia to be left on the area of the monument directly in front of the headstone. Plastic materials are also discouraged.
Staff Recommendation to Hearing Panel: No changes are required to the draft Policy to address the concern raised by Ms Winter.

CEMETERY MAINTENANCE

Discussion: G MacLeod said this is something that could be commented on as part of the LTP submission. Amenities notes for cemeteries, and making sure there is places for people to reflect and appropriate pathways.

Submission by Miss Claire Ward

Officer Recommendations:
Reasons: The submission is mostly in relation to the installation of amenity assets such as seating and pathway. As the cemetery in question is not named, staff will need to make contact with Miss Ward to find out more on this request. The submission itself does not change or propose change to the policy.
Staff Recommendation to Hearing Panel: Notes that this is for development within the cemetery rather than on the policy itself.
Staff will make contact with the submitter to find out more in regards to which cemetery that the request for seating and pathway relates to.

SHRUBS AND TREES

Discussion: The parks contractors have been advised of this work required to reduce the shading, and with the new planting this is a much lower growing shrub. Councillor Doody noted the extra planting that some relatives do around plots. M Harris responded that the Policy does give staff something to use, and regarding the concern with excessive planting around plots. M Harris advised the people will be sensitively approached regarding this and asking them to cut them back. There is the opportunity for people to plant a rose in the garden site and people need to get the approval of the Green space team for this.

Submission by Mrs Mary Stephens
Submission by Mr Harold Burson

Officer Recommendations:
Reasons: The content of the submissions is based on what we would consider a service request rather than change to the policy as it is proposed. So I am going to forward these as RFS to our operations team for them to respond directly with the submitters.
Mr Burson submission is standard procedure for our team and contractor within the contract, so this needs to be addressed as should not have to be pulled into this policy. Our operations team will audit this and work with the contractor to ensure compliance.
Staff Recommendation to Hearing Panel: Staff will work directly with the submitters through our request for service process as these are standard operating procedures within our contract. That we audit regularly.

MONUMENTS AND STRUCTURES

Discussion: G MacLeod advised that this is based on what other Councils are doing around the country. Individual headstones are what families choose and for remembrance.

Following question from Councillor Doody about headstones that are damaged by the earthquakes, and families are unable to be found, G MacLeod said this is a difficult situation for staff, as some families have already gone about repairing their family members headstones and some haven't been done. Does this set a precedent that the Council is then going to look after these headstones. It is difficult to locate some families of damaged sites and some headstones are just laid down for safety reasons. Cemeteries in New Zealand are relatively young and for some headstones these are starting to fall into disrepair and there is no descendants to look after these. The Council has recently taken over two private cemeteries in the district and there is potential for more of these, and some of these are retired and have no lineage. M Harris added that the records from some private cemeteries are not thorough and it would be very difficult to locate family members of sites.

Councillor Redmond asked what is the position of a headstone is damaged by a Council contractor. Staff advised if a situation as such does arise, the contractor would pay the cost of repairs.

Submission by Mr Paul Starling
Submission by Ms Roz Winter
Submission by Mr Harold Burson

Officer Recommendations:
Reasons: It is currently common practise among Council's to not maintain headstones due to them being privately owned. In many situations where they are damaged they are either laid down or put into a safe position, which is what the cemetery policy proposes WDC does.
If Councillors wish for staff to review this practise it would be worth a price investigation into how this might work and also looking from a national perspective if this has been done anywhere.
Headstones are generally well kept for a short period of time after they are installed but it is reliant on family members remaining in a district or living loved ones to continue the upkeep. This obviously has a finite period for every headstone or monument that is erected within a cemetery.
More work is required should this practice be altered in any way.
Staff Recommendation to Hearing Panel: Staff to review the practises of other Council's to see if any organisation is currently taken ownership or responsibility back for headstones. These assets are not currently owned by Council's therefore are not renewed or replaced, rather they are made safe.

CEDING OF CEMETERIES TO COUNCIL

Submission by Mr Paul Starling

Officer Recommendations:
Reasons: The draft policy provides for a range of situations and circumstances for ceding a cemetery to Council. The details of the arrangement will depend on what is agreed between the parties at the time.
Staff Recommendation to Hearing Panel: No change is required to the draft Policy on this point.

GENERAL - PARKING

Submission by Mrs Bev Tomkies

Officer Recommendations:
Reasons: Communication with the sport clubs is key in ensuring that members do not park in the cemetery and access the sports fields. This can also be communicated to Mainland Football for any visiting team, a similar message has been delivered on other cemeteries throughout the Canterbury region.

Staff Recommendation to Hearing Panel: There is work proposed for the car park at Maria Andrews in the coming year which would assist with parking in the area.
Note that there is work happening at the Coldstream Road development that will allow for a greater capacity of car parking throughout the Coldstream sporting area.
Staff will communicate to local sports clubs that parking in the cemetery is not appropriate for sports park users.

Following this deliberation, it was agreed that the hearing deliberation adjourn to allow time for further information to be investigated on

- *Eco burials,*
- *Reserving plots*
- *Headstone dimensions*

The Chairperson thanked staff for the information provided for this hearing.

The deliberations were adjourned at 11.10am and were reconvened at 11.30am on Thursday 18 March 2021.

Reconvened Hearing –at 11.30am on Thursday 18 March 2021 in Meeting Room 1, Ruataniwha Kaiapoi Civic Centre, Kaiapoi

Chairperson Brine welcomed everyone to the reconvening of this hearing and staff spoke to the information that had been previously circulated to the Hearing Panel (Memo 210310040499)

Eco Burials

G MacLeod provided some background information on eco burials. Christchurch City Council reports that they have 12 plots that are purchased on requirement and only for Diamond Harbour residents. There are to be no plaques in the area of eco burials, but any tree planted would be replaced. The requirements for a person being buried in an eco-plot were highlighted, and also any site constraints – soil types that are most suitable, flat land that is free draining and not a high water table. Council could look at alternatives to plaques (seats?). Christchurch City Council is planning a new cemetery in the Templeton area and suggest that it would be a better option to have eco burials in a new cemetery location, rather than introducing them into an existing location. It could be an option for people from Waimakariri District, who wish to, to use an eco-burial site in Christchurch City Council area

Selwyn District Council currently doesn't have this service available.

The Hearing Panel agreed that this matter could be reconsidered when a new development is created – Cr Doody suggested that there could be a suitable area in the current Oxford Cemetery.

Reserving Plots

K Johnson provided some background information from other Councils around the country and their current approach to reserving plots, noting that there was mixed responses received.

M Harris recommended that there not be pre-purchase option available, except where there is a plot available and requested beside a close family member.

Councillor Redmond asked about the former policy, which stated that plots could be reserved with no restrictions. The moratorium was put in place during the Covid-19 lockdown in 2020.

Moved Councillor Brine Seconded Councillor Doody

THAT the Draft Cemetery Policy Hearing Panel recommend

(a) **Approval** to allow single plots to be reserved for 10 years and this can be re-validated before expiry of that time, with the inclusion of an administrative fee. This fee will be considered as part of the Annual Plan 2022/23.

(b) **Approve** the addition of the following clause to the Cemetery Policy

Section 7.2.5

(iv) Notwithstanding the above any person may pre-purchase one single plot for a term of ten years which upon payment of a further administration fee may be extended for a further period of ten years.

CARRIED

Moved Councillor Brine Seconded Councillor Doody

THAT the Draft Cemetery Policy Hearing Panel recommend

(c) **THAT** the Manager Customer Services, Community Green Space Manager and Greenspace Portfolio holder have the discretion to meet and discuss any concerns over the availability of plots and if necessary temporarily suspend the pre-purchase of cemetery plots.

CARRIED

Headstone Dimensions

Members discussed the suggested dimensions for single and double headstones and agreed with having a total height, rather than separate heights for first and second steps and the headstone. This allows for more flexibility in the size of headstones.

Moved Councillor Brine Seconded Councillor Doody

THAT the Draft Cemetery Policy Hearing Panel

(a) Recommend that the following monument sizes and permitted construction information be included in the Cemetery Policy:

i. Single headstone - to have a height of 1000mm, width 900mm and depth of 150mm

ii. Double headstone – to have a height of 1000mm, width 1000mm and depth of 150mm.

iii. The inclusion of feature stones or rocks as the monument will be considered on a case by case basis.

iv. Stainless steel and ceramic will not be permitted as materials in the construction of a headstone. Minor fixtures in these materials e.g. photo images, will continue to be allowed.

CARRIED

There being no further business, the hearing closed at 12.26pm.

CONFIRMED

_____
Chairperson
Councillor R Brine

_____
Date